CHEVROLET

2023

CORVETTE

Owner's Manual

Contents

Introduction 1
Keys, Doors, and Windows 6
Seats and Restraints 38
Storage 69
Instruments and Controls 72
Lighting 102
Infotainment System 108
Climate Controls 163
Driving and Operating 168
Vehicle Care 231
Service and Maintenance 305
Technical Data 314
Customer Information 319
Reporting Safety Defects 327
OnStar 331
Connected Services 336
Index. 339

Litho in U.S.A.
Part No. 84795300 A First Printing

Introduction

California Proposition 65 Warning

WARNING

Operating, servicing and maintaining a passenger vehicle or off-highway motor vehicle can expose you to chemicals including engine exhaust, carbon monoxide, phthalates, and lead, which are known to the State of California to cause cancer and birth defects or other reproductive harm. To minimize exposure, avoid breathing exhaust, do not idle engine except as necessary, service your vehicle in a well-ventilated area and wear gloves or wash your hands frequently when servicing your vehicle. For more information go to www.P65Warnings.ca.gov/passenger-vehicle.

©2022 General Motors LLC. All Rights Reserved.

Introduction

The names, logos, emblems, slogans, vehicle model names, and vehicle body designs appearing in this manual including, but not limited to, GM, the GM logo, CHEVROLET, the CHEVROLET emblem, CORVETTE, and the CORVETTE emblem are trademarks and/or service marks of General Motors LLC, its subsidiaries, affiliates, or licensors.

For vehicles first sold in Canada, substitute the name “General Motors of Canada Company” for Chevrolet Motor Division wherever it appears in this manual.

This manual describes features that may or may not be on the vehicle because of optional equipment that was not purchased on the vehicle, model variants, country specifications, features/applications that may not be available in your region, or changes subsequent to the printing of this owner’s manual, including changes in standard or optional content.

Refer to the purchase documentation relating to your specific vehicle to confirm the features.

Keep this manual in the vehicle for quick reference.

Canadian Vehicle Owners

A French language manual can be obtained from your dealer, at www.helminc.com, or from:

Propriétaires Canadiens

On peut obtenir un exemplaire de ce guide en français auprès du concessionnaire ou à l'adresse suivante:

Helm, Incorporated
Attention: Customer Service
47911 Halyard Drive
Plymouth, MI 48170
USA

Using this Manual

To quickly locate information about the vehicle, use the Index in the back of the manual. It is an alphabetical list of what is in the manual and the page number where it can be found.

Danger, Warning, and Caution

Warning messages found on vehicle labels and in this manual describe hazards and what to do to avoid or reduce them.

⚠ Danger

Danger indicates a hazard with a high level of risk which will result in serious injury or death.

⚠ Warning

Warning indicates a hazard that could result in injury or death.

Caution

Caution indicates a hazard that could result in property or vehicle damage.

A circle with a slash through it is a safety symbol which means “Do not,” “Do not do this,” or “Do not let this happen.”

Symbols

The vehicle has components and labels that use symbols instead of text. Symbols are shown along with the text describing the operation or information relating to a specific component, control, message, gauge, or indicator.

: Shown when the owner’s manual has additional instructions or information.

: Shown when the service manual has additional instructions or information.

: Shown when there is more information on another page — “see page.”

Vehicle Symbol Chart

Here are some additional symbols that may be found on the vehicle and what they mean. See the features in this manual for information.

: Air Conditioning System

: Air Conditioning Refrigerant Oil

: Airbag Readiness Light

: Antilock Brake System (ABS)

: Brake System Warning Light

: Carbon Monoxide

: Dispose of Used Components Properly

: Do Not Apply High Pressure Water

: Engine Coolant Temperature

: Flame/Fire Prohibited

: Flammable

: Fuse Block Cover Lock Location

: Fuses

: ISOFIX/LATCH System Child Restraints

: Keep Fuse Block Covers Properly Installed

: Lane Keep Assist

: Malfunction Indicator Lamp

: Oil Pressure

: Park Assist

: Power

: Rear Cross Traffic Alert

: Registered Technician

: Remote Vehicle Start

: Risk of Electrical Fire

: Seat Belt Reminders

: Side Blind Zone Alert

: Tire Pressure Monitor

: Traction Control/StabiliTrak/Electronic Stability Control (ESC)

: Under Pressure

Instrument Panel Overview

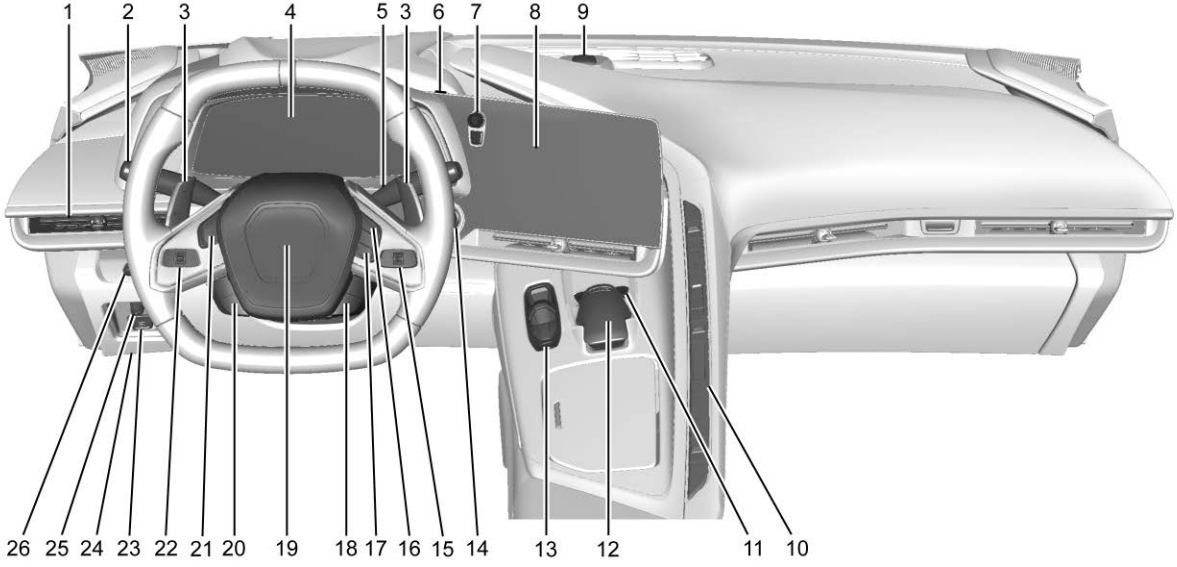

1. *Air Vents* ⇨ *166*.
2. Turn Signal Lever. See *Turn and Lane-Change Signals* ⇨ *104*.

   Exterior Lamp Controls ⇨ *102*.
3. Manual Shift Paddles. See *Manual Mode* ⇨ *198*.
4. *Instrument Cluster* ⇨ *79*.
5. *Windshield Wiper/Washer* ⇨ *73*.
6. Near Field Communication Antenna (NFC). See *Bluetooth (Overview)* ⇨ *144* or *Bluetooth (Pairing and Using a Phone)* ⇨ *144*.
7. Volume Control Knob and Infotainment Home Button. See *Overview* ⇨ *109*.
8. Infotainment. See *Using the System* ⇨ *112*.
9. Alarm System Indicator Light. See *Vehicle Alarm System* ⇨ *21*.

   Light Sensor. See *Automatic Headlamp System* ⇨ *103*.
10. *Dual Automatic Climate Control System* ⇨ *163*.

    Driver and Passenger Heated and Ventilated Seat Controls (If Equipped). See *Heated and Ventilated Front Seats* ⇨ *43*.
11. *Traction Control/Electronic Stability Control* ⇨ *206*.

    Curb View Camera (If Equipped). See *Assistance Systems for Parking or Backing* ⇨ *223*.

    Front Lift System Control (If Equipped). See *Front Lift System* ⇨ *214*.
12. *Driver Mode Control* ⇨ *208*.
13. Shift Switches. See *Dual Clutch Transmission* ⇨ *195*.
14. Keyless Ignition. See *Ignition Positions* ⇨ *190*.
15. Driver Information Center (DIC) Controls. See *Driver Information Center (DIC)* ⇨ *92*.
16. *Heated Steering Wheel* ⇨ *73* (If Equipped).
17. Bluetooth Controls. See *Steering Wheel Controls* ⇨ *111*.

    Voice Recognition Controls. See *Steering Wheel Controls* ⇨ *111*.
18. Volume Control Buttons. See *Steering Wheel Controls* ⇨ *111*.
19. *Horn* ⇨ *73*.
20. Favorites Select Buttons. *Steering Wheel Controls* ⇨ *111*.
21. Z-Mode Control. See *Driver Mode Control* ⇨ *208*.
22. *Cruise Control* ⇨ *219*.
23. *Electric Parking Brake* ⇨ *204*.
24. Data Link Connector (DLC) (Out of View). See *Malfunction Indicator Lamp (Check Engine Light)* ⇨ *86*.
25. *Instrument Panel Illumination Control* ⇨ *105*.
26. Head-Up Display Controls (If Equipped). See *Head-Up Display (HUD)* ⇨ *95*.

Keys, Doors, and Windows

Keys and Locks
Keys 6
Remote Key 7
Remote Key Operation 7
Remote Vehicle Start 12
Door Locks 14
Delayed Locking 16
Automatic Door Locks 16
Lockout Protection 16

Doors
Hood 17
Hatch (Trunk) 19

Vehicle Security
Vehicle Security 21
Vehicle Alarm System 21
Immobilizer 23
Immobilizer Operation 23

Exterior Mirrors
Convex Mirrors 24
Power Mirrors 24
Folding Mirrors 24
Heated Mirrors 25
Automatic Dimming Mirror 25
Reverse Tilt Mirrors 25

Interior Mirrors
Interior Rearview Mirrors 26
Manual Rearview Mirror 26
Automatic Dimming Rearview Mirror ... 26
Rear Camera Mirror 26

Windows
Windows 28
Power Windows 28
Rear Windows 30
Sun Visors 30

Roof
Roof Panel 30
Convertible Top 33

Keys and Locks

Keys

⚠ Warning

Leaving children in a vehicle with a remote key is dangerous and children or others could be seriously injured or killed. They could operate the power windows or other controls or make the vehicle move. The windows will function with the remote key in the vehicle, and children or others could be caught in the path of a closing window. Do not leave children in a vehicle with a remote key.

The mechanical key can be used to open the vehicle if power to the vehicle is lost.

Convertible Shown, Coupe Similar

Convertible Shown, Coupe Similar

Press the button on the side to remove the mechanical key. Never pull the mechanical key out without pressing the button.

This vehicle has a Keyless Access system with pushbutton start. See *Ignition Positions* ⇨ *190* for information on starting the vehicle.

If it becomes difficult to turn the mechanical key, inspect the mechanical key blade for debris.

Remote Key

See *Radio Frequency Statement* ⇨ *327*.

If there is a decrease in the remote key operating range:

- Check the distance. The remote key may be too far from the vehicle.
- Check the location. Other vehicles or objects may be blocking the signal.
- Check the remote key battery. See “Battery Replacement” later in this section.
- If the remote key is still not working correctly, see your dealer or a qualified technician for service.

Remote Key Operation

The Keyless Access system allows for vehicle entry when the remote key is within 1 m (3 ft). See “Keyless Access Operation” later in this section.

The remote key functions may work up to 60 m (197 ft) away from the vehicle.

Other conditions can affect the performance of the remote key. See *Remote Key* ⇨ *7*.

: Press to lock both doors and the fuel door. The turn signal indicators may flash and/or the horn may sound on the second press to indicate locking. To view available settings from the infotainment screen, touch Settings > Vehicle > Remote Lock, Unlock, Start.

Pressing may also arm the theft-deterrent system. See *Vehicle Alarm System* ⇨ *21*.

If equipped with remote folding mirrors, double pressing and holding for one second may fold the mirrors. See *Folding Mirrors* ⇨ *24*.

: Press to unlock the driver door and the fuel door. Press again within five seconds to unlock both doors. When remotely unlocking the vehicle at night, the headlamps and taillamps may come on for about 30 seconds to light your approach to the vehicle depending on the settings. To view available settings from the infotainment screen, touch Settings > Vehicle > Remote Lock, Unlock, Start. The turn signal indicators may flash to indicate unlocking.

Pressing will disarm the theft-deterrent system. See *Vehicle Alarm System* ⇨ *21*.

If equipped with remote window operation, double press and hold for three seconds to remotely open the windows, if enabled. To view available settings from the infotainment screen, touch Settings > Vehicle > Remote Lock, Unlock, Start.

If equipped with remote folding mirrors, double pressing and holding for one second may unfold the mirrors. See *Folding Mirrors* ⇨ *24*.

X2 : Press twice to start the engine from outside the vehicle using the remote key. See *Remote Vehicle Start* ⇨ *12*. The vehicle can not be driven during a remote start. To drive the vehicle, press the brake pedal, then press ENGINE START/STOP, with the remote key in the vehicle.

: Press and release to initiate vehicle locator. The exterior lamps flash and the horn chirps three times. Press and hold for approximately three seconds to sound the panic alarm. The horn sounds and the turn signal lamps flash for 30 seconds, or until is pressed again or the vehicle is started.

: Press twice to release the hatch/trunk. The vehicle must be in P (Park).

: Press twice and continue holding following the second press for approximately one second to release the hood. The vehicle must be in P (Park).

: If equipped, press and release , then immediately press and hold continuously to open the convertible top all the way. Release the button to stop movement. This button will only open the convertible top.

If equipped, press and release then immediately press and hold to open the engine compartment.

Convertible Top

- Do not try to start the vehicle while using the remote key to open the convertible top. Release both the remote key button and ENGINE START/STOP and wait a few seconds before starting the vehicle normally.

Keyless Access Operation

This Keyless Access system allows you to unlock and unlatch the doors and hatch/trunk without removing the remote key from your pocket, purse, briefcase, etc. The remote key must be within 1 m (3 ft) of the trunk or door being opened. A touchpad is located on the door handle.

The Keyless Access system can be programmed to unlock both doors on the first door handle touchpad press from the driver door. Keyless Access can also be turned Off. To view available settings from the infotainment screen, touch Settings > Vehicle > Remote Lock, Unlock, Start.

If equipped with memory seats, remote keys 1 and 2 are linked to seating positions of memory 1 or 2. See *Memory Seats* ⇨ *40*.

Keyless Unlocking

Press the door handle touchpad to unlock and open the doors if the remote key is within 1 m (3 ft). See *Door Locks* ⇨ *14*. To view available settings from the infotainment screen, touch Settings > Vehicle > Remote Lock, Unlock, Start.

Disable/Enable Keyless Unlocking of Exterior Door Handles and Trunk

If equipped, keyless unlocking of the exterior door handles and trunk can be disabled and enabled.

Disabling Keyless Unlocking:

With the vehicle off, press and hold 🔒 and 🔓 on the remote key at the same time for approximately three seconds. The turn signal lamps will flash four times quickly to indicate access is disabled. Using any exterior handle to unlock the doors or open the hood or hatch/trunk will cause the turn signal lamps to flash four times quickly, indicating access is disabled. If disabled, disarm the alarm system before starting the vehicle. Disabling Keyless Unlocking may also be configured under Vehicle Personalization.

Enabling Keyless Unlocking:

With the vehicle off, press and hold 🔒 and 🔓 on the remote key at the same time for approximately three seconds. The turn signal lamps will flash twice quickly to indicate access is enabled. Enabling Keyless Unlocking may also be configured under Vehicle Personalization.

Passive Locking

Keyless Access will lock several seconds after all doors are closed if the vehicle is off and at least one remote key has been removed or none remain in the vehicle.

The fuel door will also lock.

If other electronic devices interfere with the remote key signal, the vehicle may not detect the remote key inside the vehicle. If passive locking is enabled, the doors may lock with the remote key inside the vehicle. Do not leave the remote key in an unattended vehicle.

If the vehicle is locked with a remote key inside the vehicle, that remote key will be disabled for starting the vehicle and other keyless access operations. To re-enable that remote key, press any button on that remote key. The remote key will also be

re-enabled when the vehicle is started with another known remote key, or when the vehicle is unlocked.

To view available settings from the infotainment screen, touch Settings > Vehicle > Remote Lock, Unlock, Start.

If equipped with remote folding mirrors, passive locking may fold and unfold the mirrors. See *Folding Mirrors* ⇨ *24*.

Temporary Disable of Passive Locking

Temporarily disable passive locking by pressing and holding 🔒 on the interior door switch with a door open for at least four seconds, or until three chimes are heard. Passive locking will then remain disabled until the vehicle is turned on.

Remote Left in Vehicle Alert

When the vehicle is turned off and a remote key is left in the vehicle, the horn will chirp three times after both doors are closed. To view available settings from the infotainment screen, touch Settings > Vehicle > Remote Lock, Unlock, Start.

Remote No Longer in Vehicle Alert

If the vehicle is on, with a door open, and then all doors are closed, the vehicle will check for remote keys inside. If a remote key is not detected, the Driver Information Center (DIC) will display NO KEY FOUND and the horn will chirp three times. This occurs only once each time the vehicle is driven. To view available settings from the infotainment screen, touch Settings > Vehicle > Remote Lock, Unlock, Start.

Keyless Trunk Opening

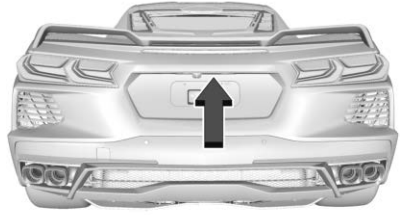

Press the hatch/trunk release touchpad to open the trunk if the remote key is within 1 m (3 ft).

Programming Remote Keys to the Vehicle

Only remote keys programmed to this vehicle will work. If a remote key is lost or stolen, a replacement can be purchased and programmed through your dealer. When the replacement remote key is programmed to this vehicle, all remaining remote keys must also be reprogrammed. Any lost or stolen remote keys will no longer work once the new remote key is programmed.

Starting the Vehicle with a Low Remote Key Battery

For improved vehicle security, the remote key is equipped with a motion sensor. When starting the vehicle, if the remote key has been idle for a while, the DIC may display KEY IN SLEEP MODE, MOVE KEY, THEN START. Move the remote key slightly and try starting the vehicle. If the remote key battery is weak or if there is interference with the signal, the DIC may display NO KEY FOUND, REPLACE BATTERY IN KEY or NO REMOTE KEY WAS DETECTED PLACE KEY IN KEY POCKET, THEN START YOUR VEHICLE.

If this occurs, follow these steps:

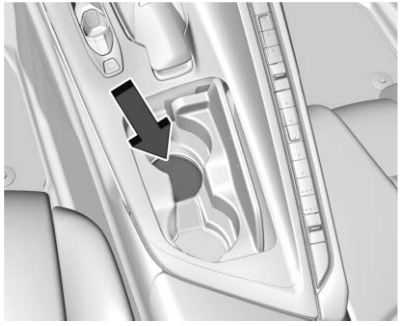

1. Place the remote key in the cupholder with the mechanical key end facing up.
2. With the vehicle in P (Park) or N (Neutral), press the brake pedal and ENGINE START/STOP.

   Replace the remote key battery as soon as possible.

Battery Replacement

⚠ Warning

Never allow children to play with the remote key. The remote key contains a small battery, which can be a choking hazard. If swallowed, internal burns can occur, resulting in severe injury or death. Seek medical attention immediately if a battery is swallowed.

⚠ Warning

To avoid personal injury, do not touch metal surfaces on the remote key when it has been exposed to extreme heat. These surfaces can be hot to the touch at temperatures above 59 °C (138 °F).

Caution

When replacing the battery, do not touch any of the circuitry on the remote key. Static from your body could damage the remote key.

Caution

Always replace the battery with the correct type. Replacing the battery with an incorrect type could potentially create a risk of battery explosion. Dispose of used batteries according to instructions and local laws. Do not attempt to burn, crush, or cut the used battery, and avoid exposing the battery to environments with extremely low air pressures or high temperatures.

Caution

If the remote key is not reassembled properly, liquids could enter the housing and damage the circuitry, resulting in a remote key malfunction and/or failure. To prevent damage, always follow the steps for remote key reassembly in this manual to ensure the remote key is sealed properly whenever the remote key is opened.

Replace the battery if the DIC displays REPLACE BATTERY IN KEY.

1. Press the button on the side of the remote key and pull the mechanical key out. Never pull the mechanical key out without pressing the button.

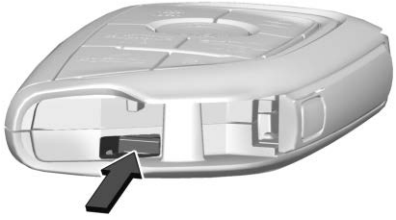

2. Use the mechanical key blade in the slot to remove the battery cover by hand.

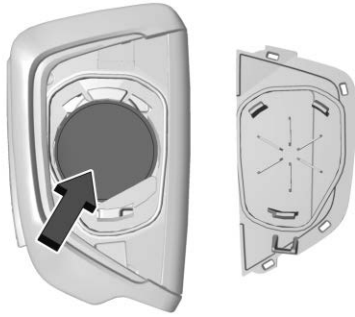

3. Remove the seal by pulling on the tab to access the battery.
4. Remove the old battery. Do not use a metal object.
5. Insert the new battery, negative side facing down. Replace with a CR2450 or equivalent battery.
6. Replace the seal, pushing it into the groove around the battery compartment.
7. Replace the battery cover by snapping it back into the remote key.
8. Reinsert the mechanical key.

Remote Vehicle Start

This feature allows the engine to be started from outside the vehicle.

: This button on the remote key is for remote start.

The climate control system will use the previous settings during a remote start. The rear window defogger may come on during remote start based on cold ambient conditions. The rear window defogger indicator light does not come on during remote start.

If equipped, the heated and ventilated front seats may also come on when the vehicle personalization setting is enabled. See *Heated and Ventilated Front Seats* ⇨ *43*.

If equipped with a remote start heated steering wheel, it may come on during a remote start. See *Heated Steering Wheel* ⇨ *73*.

Laws in some local communities may restrict the use of remote starters. For example, some laws may require a person using remote start to have the vehicle in view. Check local regulations for any requirements.

If your vehicle is low on fuel, do not use the remote start feature. The vehicle may run out of fuel.

The remote key range may be shorter while the vehicle is running.

Other conditions can affect the performance of the remote key. See *Remote Key* ⇨ 7.

You have a total of 30 minutes of engine running time. The maximum run time of a single start is 15 minutes, and it will shut off automatically. You could do three 10 minute starts if you manually shut off after 10 minutes. The last 10 minute start would shut off automatically as your total 30 minutes will have been used.

Starting the Engine Using Remote Start

1. Press (x2) twice on the remote key. The turn signal lamps will flash. The lamps flash to confirm the request to remote start the vehicle has been received. During the remote start, the parking lamps will remain on as long as the engine is running.
2. The engine will shut off after 15 minutes or after the remainder of the 30 minute total running time is used, unless you stop the remote start before engine running has completed or the ignition is turned on.
3. Press the brake pedal and turn the ignition on to drive the vehicle.

Total Engine Run Time

Remote start can be used for up to 30 minutes of total engine run time.

After two remote starts of 15 minutes, or multiple shorter time starts totaling 30 minutes have been used, the vehicle's ignition must be turned on and then off before the remote start can be used again.

Canceling a Remote Start

To cancel a remote start, do any of the following:

- Press (x2). The parking lamps will turn off.
- Turn on the hazard warning flashers.
- Turn the vehicle on and then back off.

Conditions in Which Remote Start Will Not Work

The remote start will not operate if any of the following occur:

- The ignition is in any mode other than off.
- A remote key is in the vehicle.
- The hatch/trunk is not closed.
- The convertible top is not fully open or closed.
- The tonneau cover is not closed.
- The hazard warning flashers are on.
- There is an emission control system malfunction.
- The engine coolant temperature is too high.
- The oil pressure is low.
- The 30 minutes of engine run time have been used.
- The vehicle is not in P (Park).

Door Locks

⚠ Warning

Unlocked doors can be dangerous.

- Passengers, especially children, can easily open the doors and fall out of a moving vehicle. The doors can be unlocked and opened while the vehicle is moving. The chance of being thrown out of the vehicle in a crash is increased if the doors are not locked. So, all passengers should wear seat belts properly and the doors should be locked whenever the vehicle is driven.
- Young children who get into unlocked vehicles may be unable to get out. A child can be overcome by extreme heat and can suffer permanent injuries or even death from heat stroke. Always lock the vehicle whenever leaving it.
- Outsiders can easily enter through an unlocked door when you slow down or stop the vehicle. Locking the doors can help prevent this from happening.

To lock or unlock a door from the outside, press 🔒 or 🔓 on the remote key.

For Keyless Access, hold the remote key within 1 m (3 ft) of the door handle. Grip and press the door handle touchpad. See *Remote Key Operation* ⇨ *7*. This feature can be programmed. To view available settings from the infotainment screen, touch Settings > Vehicle > Remote Lock, Unlock, Start.

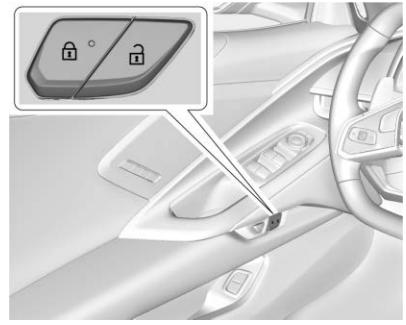

Convertible Shown, Coupe Similar

To lock or unlock the doors from the inside, use the driver power door lock switch.

🔒 **:** Press to lock the doors. The indicator light in the switch will illuminate when locked.

🔓 **:** Press to unlock the doors.

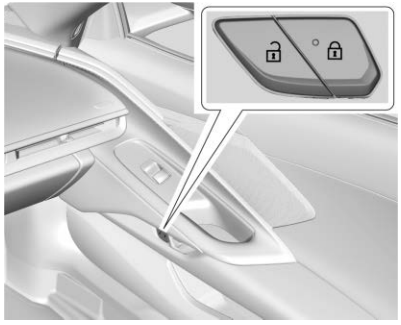

The passenger power door lock switch can also be used to lock or unlock the doors.

The fuel door, hood, and hatch/trunk are also locked and unlocked using either power door lock switch.

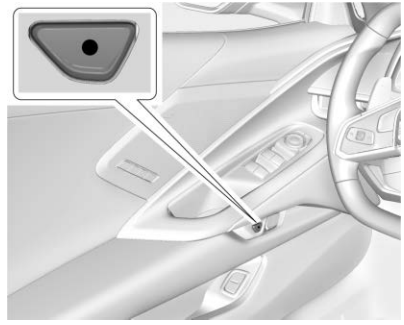

Convertible Shown, Coupe Similar

To open a door from the inside, press the door unlatch button.

Loss of Vehicle Electrical Power

If the vehicle has lost battery power, open the doors manually.

From Inside the Vehicle

Pull the driver door release handle.

Pull the passenger door release handle.

From Outside the Vehicle

There is a back up key cylinder to open the left hand door

In the air inlet located on the body, rearward of the left door handle.

Free-Turning Locks

The key lock cylinder turns freely when either the wrong key is used, or the correct key is not fully inserted. The free-turning lock feature prevents the lock cylinder from being forced open. To reset the lock cylinder, ensure that the correct key is fully inserted into the lock cylinder. Rotate the key until you feel the lock cylinder click back into place. Remove the key and reinsert fully, then rotate the key to unlock the vehicle.

Delayed Locking

This feature delays the actual locking of the doors until five seconds after all doors are closed.

When 🔒 is pressed on the power door lock switch with the door open, a chime will sound three times indicating that delayed locking is active.

The doors will then lock automatically five seconds after all doors are closed. If a door is reopened before five seconds have elapsed, the five-second timer will reset once all the doors are closed again.

Press 🔒 on the door lock switch again, or press 🔒 on the remote key, to override this feature and lock the doors immediately.

Delayed locking can be programmed. To view available settings from the infotainment screen, touch Settings > Vehicle > Power Door Locks.

Automatic Door Locks

The doors will lock automatically when all doors are closed, the ignition is on, and the vehicle is shifted out of P (Park).

To unlock the doors:

- Press 🔓 on a power door lock switch.
- Shift the transmission into P (Park).

If a vehicle door is unlocked and then opened and closed, the doors will lock either when your foot is removed from the brake or the vehicle speed becomes faster than 13 km/h (8 mph).

Automatic door locking cannot be disabled. Automatic door unlocking can be programmed. To view available settings from the infotainment screen, touch Settings > Vehicle > Power Door Locks.

Lockout Protection

If the ignition is on or in accessory mode and the power door lock switch is pressed with the driver door open, all the doors will lock and only the driver door will unlock.

If the vehicle is off and locking is requested while a door is open, when all doors are closed the vehicle will check for remote keys inside. If a remote key is detected and the

number of remote keys inside has not reduced, the driver door will unlock and the horn will chirp three times.

Lockout Protection can be manually overridden with the driver door open by pressing and holding on the power door lock switch.

Doors

Hood

Hood Release

⚠ Warning

Do not drive the vehicle if the hood is not latched completely. The hood could open fully, block your vision, and cause a crash. You or others could be injured. Always close the hood completely before driving. When the hood is not closed, the vehicle will not exceed 42 km/h (26 mph). Close the hood to drive faster than 42 km/h (26 mph).

The hood compartment can be accessed in several ways.

Ensure the hood is clear of any objects before opening.

This vehicle prevents from shifting out of P (Park) when the hood is not closed. Close the hood to shift out of P (Park). Confirm the hood is closed by checking that the hood is flush with the surrounding components.

If the hood is closed but the ajar message is still present, then the transmission lockout can be overridden by holding the brake for 20 seconds and then shifting into D (Drive). In this case, the vehicle will not exceed 42 km/h (26 mph). See your dealer for service.

Driver Door Hood Latch Release Button

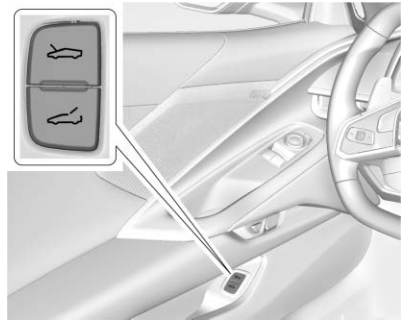

1. With the transmission in P (Park), press on the bottom of the driver door to release the hood.
2. From the front of the vehicle, lift the hood slightly until the gas strut system automatically raises and holds it in the fully open position.
3. The hood light and Open Hood message will display in the Driver Information Center (DIC) when the hood is open.

Using the Remote Key

1. Press twice on the remote key to release the hood.
2. From the front of the vehicle, lift the hood slightly until the gas strut system automatically raises and holds it in the fully open position.
3. The hood light and Open Hood message will display in the Driver Information Center (DIC) when the hood is open.

Front Fascia TouchPad

1. Locate the touchpad in the grill opening near the driver side headlamp.
2. Press the touchpad once to release the hood. The remote key must be within 1 m (3 ft) of the hood.
3. From the front of the vehicle, lift the hood slightly until the gas strut system automatically raises and holds it in the fully open position.
4. The hood light and Open Hood message will display in the Driver Information Center (DIC) when the hood is open.

Opening The Hood When There Is No Electrical Power

The manual release cable should only be used for service and/or emergency use, such as a loss of vehicle electrical power.

To enter the vehicle in the event electrical power has been lost, see “Loss of Vehicle Electrical Power” under *Door Locks* ⇨ *14*.

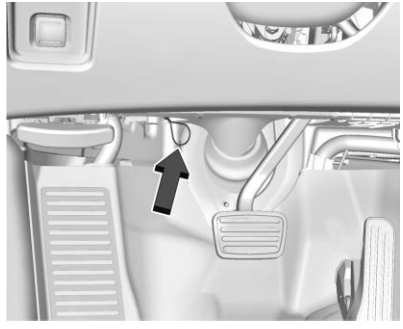

1. Locate the manual release cable loop to the left of the brake pedal.
2. Pull the manual release cable twice to release the hood.
3. From the front of the vehicle, lift the hood slightly until the gas strut system automatically raises and holds it in the fully open position.

Emergency Hood Release Button

The underhood compartment is equipped with a glow-in-the-dark emergency hood release button. This button will glow following exposure to light. Press the button to open the hood from inside the underhood compartment.

Closing the Hood

⚠ Warning

Do not drive the vehicle if the hood is not latched completely. The hood could open fully, block your vision, and cause a crash. You or others could be injured. Always close the hood completely before

(Continued)

Warning (Continued)

driving. When the hood is not closed, the vehicle will not exceed 42 km/h (26 mph). Close the hood to drive faster than 42 km/h (26 mph).

The hood is not heavy enough to latch under its own weight. The hood will remain open until the striker is pushed into the latch. Ensure the hood is fully latched before taking the vehicle out of P (Park).

1. Before closing the hood, be sure all filler caps are on properly, and all tools are removed.
2. Ensure that all cargo is placed away from the emergency hood release button.
3. Pull the hood down and set the striker gently into the latch.
4. Firmly press down on the front edge of the hood until the latch clicks twice.
5. Check that the hood is flush to the fascia to ensure the hood is fully closed.

Storing Your Vehicle

⚠ Warning

The emergency hood release button inside the underhood compartment will not function when the battery is disconnected or depleted. To avoid personal injury or death, always keep the hood fully closed and latched when storing the vehicle. If the hood is not latched, a person could climb into the underhood compartment and inadvertently close the hood. People should never climb inside the underhood compartment. Never shut the hood when a person is inside.

See “Opening The Hood When There Is No Electrical Power,” earlier in this section.

Hatch (Trunk)

⚠ Warning

Components under the hatch, hatch vents, and glass can get hot from running the engine. To help avoid the risk of burning unprotected skin, never touch

(Continued)

Warning (Continued)

these components until they have cooled, and always use a glove or towel to avoid direct skin contact.

⚠ Warning

Turn the vehicle off before opening the hatch. If the engine is running with the hatch open, you or others could be injured.

Hatch/Trunk Release

The vehicle must be in P (Park).

⚠ Warning

When opening or closing the hatch/trunk, keep hands away from the closure area. You or others could be injured.

To release the hatch/trunk:

⚠ Warning

Vehicles equipped with a rear spoiler have a small amount of space between the hatch/trunk lid and the rear spoiler.

(Continued)

Warning (Continued)

To help avoid potential injury from pinching, lift or close the hatch/trunk lid by using only the middle section. If the hatch/trunk lid near the area of the raised portion of the spoiler is used, use one hand to raise/lower the hatch/trunk lid enough to clear the spoiler, and use the other hand to fully open/close the hatch/trunk lid.

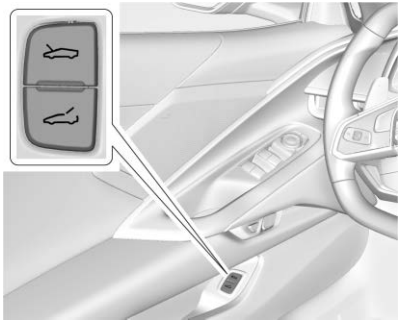

Convertible Shown, Coupe Similar

- Press on the driver door.

- Press X2 on the remote key two times quickly. See *Remote Key* ⇨ *7*.

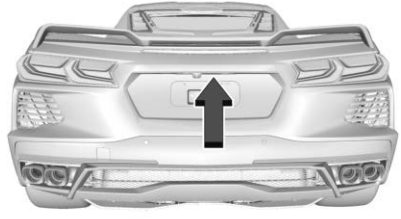

- Press the hatch/trunk release touchpad while unlocked, or if locked, with the remote key within 1 m (3 ft). See *Keys* ⇨ *6*.
- From the rear of the vehicle, lift the hatch/trunk until the gas strut system automatically raises and holds it in the fully open position.

Hatch/Trunk Closing

Caution

Do not store heavy or sharp objects in the rear storage compartments located in the hatch/trunk area. The objects could damage the underside of the hatch/trunk.

Caution

To avoid damage to the tonneau cover, do not store cargo above the weatherstrip in the hatch (trunk). Always store cargo below the weatherstrip.

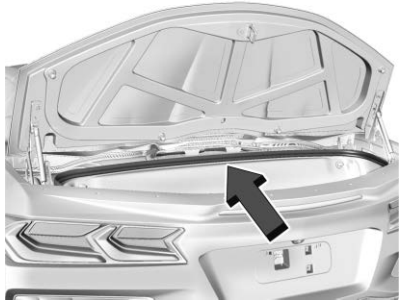

Use the pull cup to close the hatch/trunk with light force until the power latch feature activates. The hatch/trunk will close the rest of the way and latch automatically.

Emergency Hatch/Trunk Release Handle

Caution
Do not use the emergency hatch/trunk release handle as a tie-down or anchor point when securing items in the hatch/trunk as it could damage the handle.

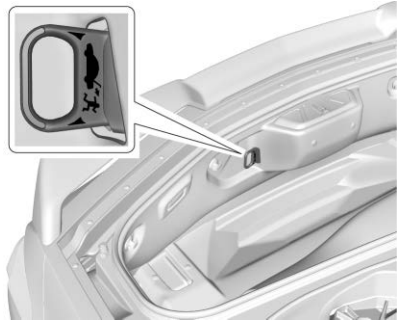

There is a glow-in-the-dark emergency hatch/trunk release handle on the inside back wall of the storage compartment. This handle will glow following exposure to light. Pull the release handle to open the hatch/trunk from the inside.

Vehicle Security

This vehicle has theft-deterrent features; however, they do not make the vehicle impossible to steal.

Vehicle Alarm System

This vehicle has a theft-deterrent alarm system.

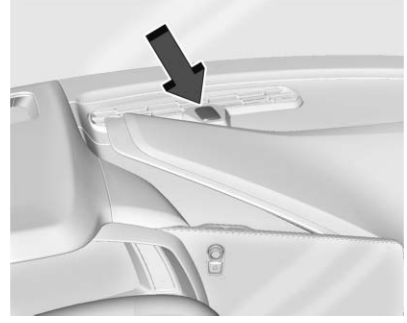

If equipped, the indicator light, on the instrument panel near the windshield, indicates the status of the system.

Off : Alarm system is disarmed.

On Solid : Vehicle is secured during the delay to arm the system.

Fast Flash : Vehicle is unsecured. A door, the hood, or the hatch/trunk is open.

Slow Flash : Alarm system is armed.

Arming the Alarm System

1. Turn off the vehicle.
2. Lock the vehicle in one of three ways:
   - Use the remote key.
   - Use the Keyless Access system.
   - With a door open, press 🔒 on the interior of the door.
3. After 30 seconds the alarm system will arm, and the indicator light will begin to slowly flash indicating the alarm system is operating. Pressing 🔒 on the remote key a second time will bypass the 30-second delay and immediately arm the alarm system.

The vehicle alarm system will not arm if the doors are locked with the mechanical key.

If the driver door is opened without first unlocking with the remote key, the horn will chirp and the lights will flash to indicate pre-alarm. If the vehicle is not started, or the door is not unlocked by pressing 🔓 on the remote key during the 10-second pre-alarm, the alarm will be activated.

The alarm will also be activated if the passenger door, the hatch/trunk, or the hood is opened without first disarming the system. When the alarm is activated, the turn signals flash and the horn sounds for about 30 seconds. The alarm system will then re-arm to monitor for the next unauthorized event.

Disarming the Alarm System

To disarm the alarm system or turn off the alarm if it has been activated, do one of the following:

- Press 🔓 on the remote key.
- Unlock the vehicle using the Keyless Access system.
- Start the vehicle.

To avoid setting off the alarm by accident:

- Lock the vehicle after all occupants have left the vehicle and both doors are closed.
- Always unlock a door with the remote key or use the Keyless Access system.

Unlocking the driver door with the key will not disarm the system or turn off the alarm.

How to Detect a Tamper Condition

If 🔓 is pressed on the remote key and the horn chirps and the lights flash three times, a previous alarm occurred while the system was armed.

If the alarm has been activated, a message will appear on the DIC.

Inclination Sensor and Intrusion Sensor

In addition to the standard theft-deterrent system features, this system may also have an inclination sensor and intrusion sensor.

The inclination sensor can activate the alarm if it senses movement of the vehicle, such as a change in vehicle orientation.

The intrusion sensor monitors the vehicle interior, and can activate the alarm if it senses unauthorized entry into the vehicle's interior. Do not allow passengers or pets to remain in the vehicle when the intrusion sensor is activated.

Before arming the theft-deterrent system and activating the intrusion sensor:

- Make sure both doors and windows are completely closed.
- Secure any loose items such as sunshades.

- Make sure there are no obstructions blocking the sensors.

Intrusion and Inclination Sensors Disable Switch

It is recommended that the intrusion and inclination sensors be deactivated if pets are left in the vehicle or if the vehicle is being transported.

When the roof panel is off, or the convertible top is down, the intrusion system is turned off.

With the vehicle turned off, press OFF on the overhead console, next to OnStar. The indicator light will display momentarily, indicating that these sensors have been disabled until the next time the alarm system is armed.

Immobilizer

See *Radio Frequency Statement* ⇨ *327*.

Immobilizer Operation

The vehicle has a passive theft-deterrent system.

The security light comes on in the instrument cluster if there is a problem with arming or disarming the theft-deterrent system. This light also comes on briefly when the engine is started.

The system is automatically armed when the ignition is turned off.

The immobilization system is disarmed when the ignition is turned on or placed in accessory mode and a valid remote key is found in the vehicle.

You do not have to manually arm or disarm the system.

The system has one or more remote keys that are matched to an immobilizer control unit in the vehicle. Only a correctly matched remote key starts the vehicle. The vehicle may not start if the remote key is damaged.

If the engine does not start and the security light comes on, there may be a problem with the immobilizer system. Try starting the vehicle again.

If the vehicle does not start and the remote key appears to be undamaged, try another remote key. Or, place the remote key in the cupholder backup location. See *Remote Key Operation* ⇨ *7*. If the engine still does not start with the other remote key, or with the remote key in the cupholder backup location, the vehicle needs service. If the engine does start, the first remote key may be faulty. See your dealer or have a new remote key programmed to the vehicle.

The immobilizer system can learn new or replacement remote keys. Up to eight remote keys can be programmed for the vehicle. To program additional remote keys, see “Programming Remote Keys to the Vehicle” under *Remote Key Operation* ⇨ *7*.

Do not leave the remote key or device that disarms or deactivates the theft-deterrent system in the vehicle.

Exterior Mirrors

Convex Mirrors

⚠ Warning

A convex mirror can make things, like other vehicles, look farther away than they really are. If you cut too sharply into the right lane, you could hit a vehicle on the right. Check the inside mirror or glance over your shoulder before changing lanes.

The passenger side mirror is convex shaped. A convex mirror surface is curved so more can be seen from the driver seat.

Power Mirrors

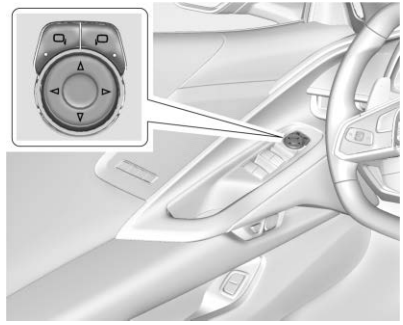

To adjust each mirror:

1. Press ▭ or ▭ to select the driver or passenger side mirror. The indicator light will illuminate.
2. Press the arrows on the control pad to move the mirror in the desired position.
3. Adjust each outside mirror so that a little of the vehicle and the area behind it can be seen.
4. Press ▭ or ▭ again to deselect the mirror.

Memory Mirrors

The vehicle may have memory mirrors. See *Memory Seats* ⇨ *40*.

Side Blind Zone Alert (SBZA)

The vehicle may have SBZA. See *Side Blind Zone Alert (SBZA)* ⇨ *225*.

Folding Mirrors

Manual Folding Mirrors

If equipped, manually fold the mirrors inward toward the vehicle to prevent damage with tight parking. Push the mirror outward to return it to the original position.

Power Folding Mirrors

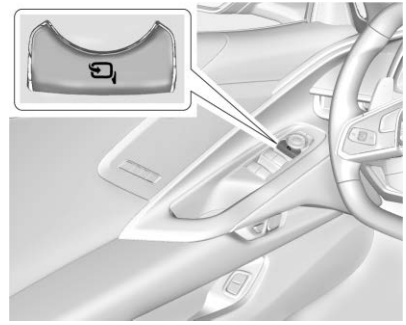

If equipped, press to power fold the mirrors. Press again to unfold.

The outside mirrors may automatically unfold when the vehicle is driven above 20 km/h (12 mph), but may be folded with the power folding mirror switch. If the vehicle speed is driven above 40 km/h (25 mph) they may automatically unfold and may not be refolded with the power folding mirror switch.

Resetting the Power Folding Mirrors

Reset the power folding mirrors if:

- The mirrors are accidentally obstructed while folding.
- They are accidentally manually folded/unfolded.
- The mirrors do not stay in the unfolded position.
- The mirrors vibrate at normal driving speeds.

Fold and unfold the mirrors one time using the mirror controls to reset them to their normal position. A noise may be heard during the resetting of the power folding mirrors. This sound is normal after a manual folding operation.

Remote Mirror Folding

If equipped with power folding mirrors and the mirrors have not been folded with the power folding mirror switch and the vehicle is in P (Park), they may be automatically folded/unfolded as follows:

1. If doors are locked by double pressing on the remote key, the mirrors may fold. If doors are unlocked by double pressing on the remote key, the mirrors may unfold. See *Remote Key Operation* ⇨ *7*.
2. If doors are locked by pressing the door handle button, the mirrors will fold. If doors are unlocked by pressing the driver door handle button, the mirrors may unfold. See "Keyless Unlocking/Locking from the Driver Door" in *Remote Key Operation* ⇨ *7*.
3. If passive locking is enabled and doors are locked by that feature, the mirrors may fold. See "Passive Locking" in *Remote Key Operation* ⇨ *7*.

If equipped with power folding mirrors, remote mirror folding is on, and the mirrors have been folded with the power folding mirror switch, they may not be automatically unfolded. To view available settings from the infotainment screen, touch Settings > Vehicle > Comfort and Convenience.

Heated Mirrors

: Press to heat the mirrors.

See "Rear Window Defogger" under *Dual Automatic Climate Control System* ⇨ *163*.

Automatic Dimming Mirror

If equipped, the driver side mirror automatically adjusts for the glare of headlamps from behind.

Reverse Tilt Mirrors

If equipped with reverse tilt mirrors and memory seats, the passenger and/or driver mirror tilts to a preselected position when the vehicle is in R (Reverse). This allows the curb to be seen when parallel parking.

The mirror(s) may move from their tilted position when:

- The vehicle is shifted out of R (Reverse), or remains in R (Reverse) for about 30 seconds.
- The vehicle is turned off.
- The vehicle is driven in R (Reverse) above a set speed.

To view available settings from the infotainment screen, touch Settings > Vehicle > Comfort and Convenience.

Interior Mirrors

Interior Rearview Mirrors

Adjust the rearview mirror for a clear view of the area behind your vehicle.

Do not spray glass cleaner directly on the mirror. Use a soft towel dampened with water.

Manual Rearview Mirror

If equipped, push the tab forward for daytime use and pull it rearward for nighttime use to avoid glare of the headlamps from behind.

Automatic Dimming Rearview Mirror

If equipped, automatic dimming reduces the glare of headlamps from behind. The dimming feature comes on when the vehicle is started.

Rear Camera Mirror

If equipped, this automatic dimming mirror provides a wide angle camera view of the area behind the vehicle.

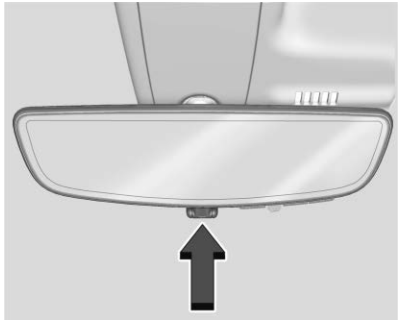

Pull the tab to turn on the display. Push the tab to turn it off. When the display is off, the automatic dimming function is active. Adjust the mirror for a clear view of the area behind the vehicle while the display is off.

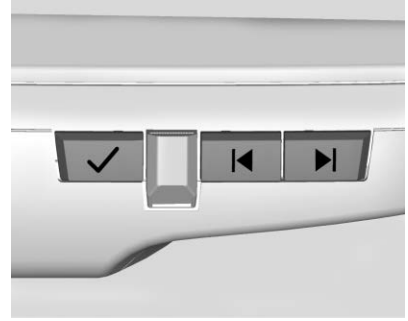

Press ✓ to scroll through the adjustment options.

Press |◀ and ▶| to adjust the settings using the indicators on the mirror. The indicators will remain visible for five seconds after the last button activation, and the settings will remain saved.

The adjustment options are:

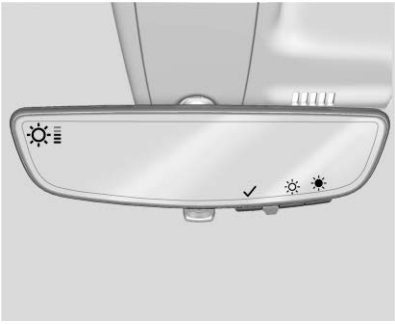

- Brightness

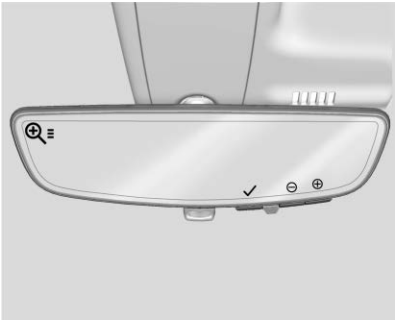

- Zoom

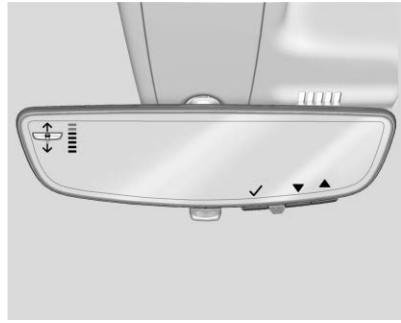

- Tilt

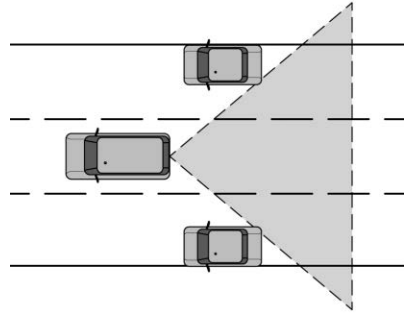

⚠ Warning

The Rear Camera Mirror (RCM) has a limited view. Portions of the road, vehicles, and other objects may not be seen. Do not drive or park the vehicle using only this camera. Objects may appear closer than they are. Check the outside mirrors or glance over your shoulder when making lane changes or merging. Failure to use proper care may result in injury, death, or vehicle damage.

Troubleshooting

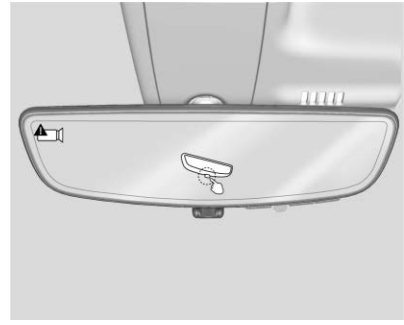

See your dealer for service if a blue screen and ⚠ are displayed in the mirror, and the display shuts off. Also, push the tab as indicated to return to the automatic dimming mode.

The Rear Camera Mirror may not work properly or display a clear image if:

- There is glare from the sun or headlamps. This may obstruct objects from view. If needed, push the tab to turn off the display.
- Dirt, snow, or other debris blocks the camera lens. Clean the lens with a soft damp cloth.

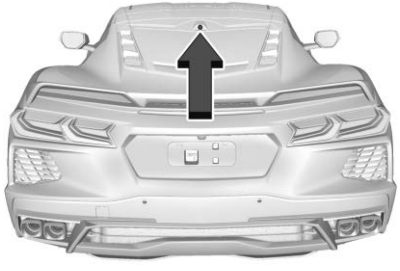

Coupe Shown, Convertible Similar

- The camera's mounting on the vehicle has been damaged, and/or the position or the mounting angle of the camera has changed.

The Rear Camera Mirror will not work on the convertible with the top down. Use the tab to switch to standard mirror display.

Windows

⚠ Warning

Never leave a child, a helpless adult, or a pet alone in a vehicle, especially with the windows closed in warm or hot weather. They can be overcome by the extreme heat and suffer permanent injuries or even death from heat stroke.

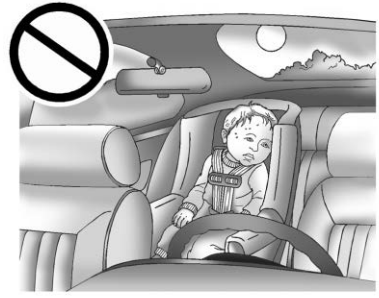

Power Windows

⚠ Warning

Children could be seriously injured or killed if caught in the path of a closing window. Never leave the remote key in a vehicle with children. When there are children in the rear seat, use the window lockout switch to prevent operation of the windows. See *Keys* ⇨ *6*.

Power windows work when the vehicle is on or in accessory mode, or when Retained Accessory Power (RAP) is active. See *Retained Accessory Power (RAP)* ⇨ *192*.

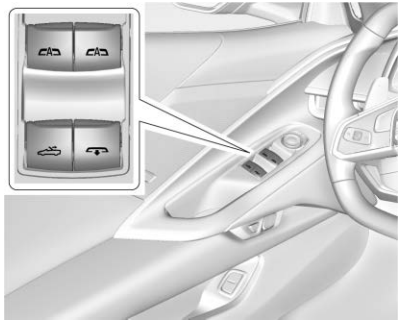

Convertible Shown, Coupe Similar

Using the window switch, press to open or pull to close the window.

The windows may be temporarily disabled if they are used repeatedly within a short time.

Window Express Movement

Side windows can be opened without holding the window switch. Press the switch down fully and quickly release to express-open the side window.

Pull the window switch up fully and quickly release to express-close the window.

Briefly press or pull the window switch to stop the window express movement.

Window Automatic Reversal System

The express-close feature will reverse window movement if it comes in contact with an object. Extreme cold or ice could cause the window to auto-reverse. The window will operate normally after the object or condition is removed.

Programming the Power Windows

Programming may be necessary if the vehicle battery has been disconnected or discharged. If the window will not express-close, program each express-close window:

1. Close all doors.
2. Turn the ignition on or to accessory mode.
3. If equipped, ensure the convertible top is fully closed.
4. Partially open the window to be programmed. Then close it and continue to pull the switch briefly after the window has fully closed.
5. Open the window and continue to press the switch briefly after the window has fully opened.

Window Operation with Convertible Top

Windows lower when the convertible top is lowered or raised. See *Convertible Top* ⇨ *33*.

Remote Window Operation

This feature allows the side windows to be opened remotely. If enabled in vehicle personalization, press 🔓 twice and hold on the remote key. To view available settings from the infotainment screen, touch Settings > Vehicle > Remote Lock, Unlock, Start.

Window Indexing

When fully closed, indexing automatically lowers the window a small amount when the door is opened. When the door is closed, the window will raise to its previous position. If either window does not index properly, it could be due to loss of power. Before seeing your dealer for service, program the power windows.

Rear Windows

Midglass (Convertible Only)

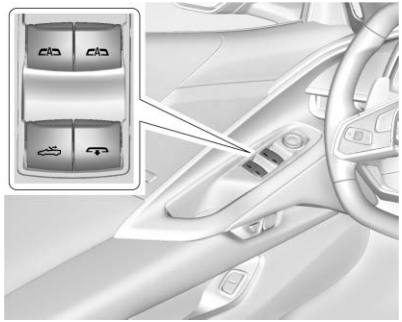

Press to lower the midglass. To provide wind block, the midglass will not lower completely. The midglass will also lower automatically when lowering the convertible top.

Sun Visors

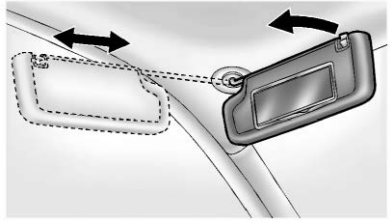

Pull the sun visor down to block glare. Detach the sun visor from the center mount to pivot to the side window and, if equipped, extend along the rod.

Roof

Roof Panel

If equipped with a removable roof panel, use the following procedures to remove or install it.

Caution

If a roof panel is dropped or rested on its edges, the roof panel, paint, and/or weatherstripping may be damaged.

(Continued)

Caution (Continued)

Always place the roof panel in the stowage receivers after removing it from the vehicle.

Caution

Use care when storing and removing the roof panel. The roof panel pins and vehicle finish could be damaged if the roof contacts the rear of the vehicle.

Removing the Roof Panel

⚠ Warning

Do not remove a roof panel while the vehicle is moving. The panel could fall into the vehicle and strike an occupant and cause you to lose control. It could also fly off and strike another vehicle. Remove the roof panel only when the vehicle is parked.

It may be necessary to have help removing the roof panel.

To remove:

1. Shift transmission into P (Park).
2. Turn the ignition off and set the parking brake.
3. Lower both sun visors.
4. Open the rear hatch/trunk and remove any items that may interfere with proper storage of the roof panel.
5. Lower the windows.

   There are two release handles on the front and one release handle on the rear of the roof panel.

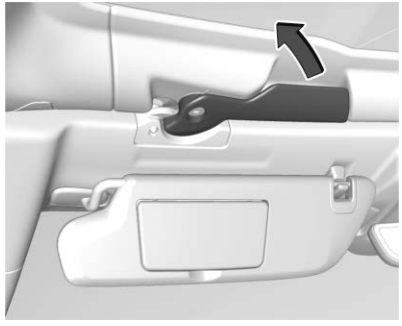

6. To unlock the front release handles, pull them outward, turning fully.

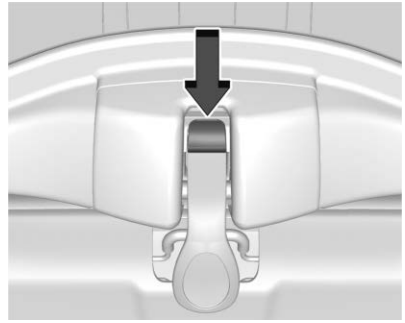

7. Press the button on the front of the rear release handle to unlock it. The latch lever will open.
8. Stand on one side of the vehicle, and if necessary, have someone stand on the other side. Together, carefully lift the front edge of the roof panel up and forward. Avoid dropping the rear edge downward.
9. When the roof panel is loose, grasp it as close to the center as possible and lift it away from the vehicle.

Storing the Roof Panel

⚠ Warning

If a roof panel is not stored properly, it could be thrown about the vehicle in a crash or sudden maneuver. People in the vehicle could be injured. Always use the stowage receivers.

1. Position the roof so that the interior is facing away from you and the front of the panel is facing up.

Lower Receivers

2. Insert the roof into the trunk with the rear end first and position the rear pins into the lower receivers. Be careful not to hit the roof on the carpet of the trunk.

Upper Receivers

3. When in place, the roof panel will rest on the upper receivers.

⚠ Warning

Do not push from the sides of the roof panel when seating the panel into the upper receivers for storage. Pushing from the sides may result in injury from pinched fingers. Only push along the top edge of the roof panel.

4. Place palms along the top edge of the roof panel and push with a quick forward motion until the roof panel locks into the upper receivers. Gently pull rearward on the roof to ensure the roof is secure.

Installing the Roof Panel

⚠ Warning

An improperly attached roof panel may fall into or fly off the vehicle. You or others could be injured. After installing the roof panel, always check that it is firmly attached by pushing up on the underside of the panel. Check now and then to be sure the roof panel is firmly in place.

Caution

Installing the roof with the release handles in the closed position could cause damage to the interior trim. Always move handles to the open position when installing the roof.

It is easier if two people install the roof panel.

To install:

1. Shift transmission into P (Park).
2. Turn the ignition off and set the parking brake.

3. Grasp the roof panel and pull toward the rear of the vehicle until it separates from the upper receivers, being careful not to hit the sides of the trunk. Carefully lift the roof panel out of the trunk.
4. Carefully place the roof panel over the top of the vehicle.

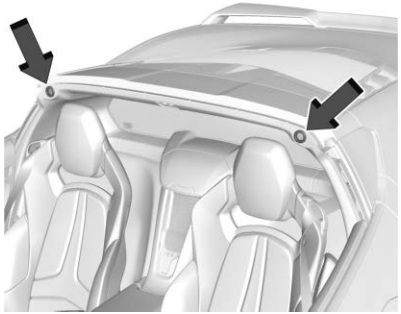

5. Position the rear edge of the roof panel next to the weatherstrip on the back of the roof opening. Then align and fit the pins at the rear of the roof panel inside the openings in the rear overhead weatherstrip. Gently lower the front edge of the roof panel to the front of the roof opening.
6. Check that the weatherstripping on each side of the roof panel is under the panel.
7. Make sure the front release handles are in the fully open position.
8. Push the roof firmly downward to engage the pins.
9. Turn the front release handles inward so that they fully latch in the closed position. It is critical that the handles fully latch.

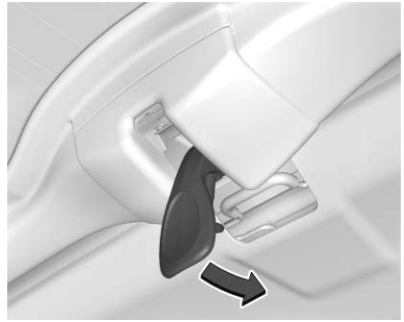

10. Push back and up on the rear release handle to insert the hook in the loop.
11. Push and pull the roof panel up and down and side to side to ensure the roof panel is securely installed.

Maintaining the Roof Panel

Caution

Using glass cleaner on a painted roof panel could damage the panel. The repairs would not be covered by the vehicle warranty. Do not use glass cleaner on the painted roof panel.

When cleaning, removing, and/or storing the roof panel:

- Flush with water to remove dust and dirt, then dry the panel.
- Do not use abrasive cleaning materials on the panel.

Convertible Top

If equipped with a convertible top, review the following before operating:

⚠ Warning

Components under the tonneau, close to the engine, can get hot from running the engine. To help avoid the risk of burning unprotected skin, never touch these components until they have cooled, and always use a glove or towel to avoid direct skin contact.

⚠ Warning

While opening or closing the convertible top, people can be injured by the moving parts of the tonneau cover or convertible top. Maintain visual contact with the top while it is being operated.

Caution

Follow these guidelines when operating the convertible top or damage can occur:

- Remove all items from the roof, trunk lid, or tonneau cover before operating.
- Remove all objects that may contact the convertible top when it is operated.
- Do not leave the vehicle with the convertible top open.
- Do not exceed 50 km/h (31 mph) until the top has completely closed or opened.
- Do not open or close the top while driving in high wind conditions.

(Continued)

Caution (Continued)

- Do not operate the convertible top multiple times in a short period of time without starting the engine to avoid draining the vehicle battery.
- Only store the vehicle with the top fully closed.

Opening the Convertible Top — Driver Door Switch

1. Ensure the roof and tonneau cover are clear of any objects.
2. The trunk must be closed.
3. Start the vehicle or place it in accessory mode.
4. When possible, operate the convertible top when the vehicle is stopped. The top can be operated while driving below 50 km/h (31 mph) and will stop if that speed is exceeded. The top operation will take approximately 17 seconds. Make sure the top operation can be completed before that speed is reached.

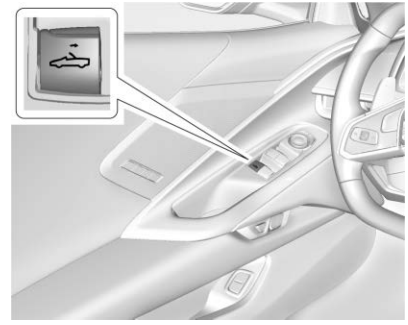

5. Press and hold . The windows will automatically lower.
6. After the convertible top is completely open, a chime sounds and a Driver Information Center (DIC) message displays. Release the switch.

If the radio is on, the sound may be muted for a brief time to automatically adjust the audio after the top is opened.

Opening the Convertible Top — Remote Key

1. Make sure the vehicle is in P (Park).
2. The trunk must be closed.
3. Keep visual contact with the vehicle. Press and release on the remote key and then quickly press and hold .

4. Hold until the top is completely opened and the exterior lamps flash. A chime will sound.

If the top stops before it has completely opened, press and then press again.

If the top still stops before it is completely open:

- Move closer to the vehicle.
- Hold until the operation is complete.
- Press and then again. Interference from other remote keys or devices may interrupt the operation.

If the top still does not open, use the convertible top switch in the vehicle. The convertible top cannot be closed using the remote key.

See *Remote Key Operation* ⇨ 7.

Closing the Convertible Top

1. Make sure the sun visor mirror covers are closed and the sun visors are stored in the center mount position.
2. Ensure the roof and tonneau cover are clear of any objects.
3. The trunk must be closed.
4. Start the vehicle or place it in accessory mode.
5. When possible, operate the convertible top when the vehicle is stopped. The top can be operated while driving below 50 km/h (31 mph) and will stop if that speed is exceeded. The top operation will take approximately 17 seconds. Make sure the top operation can be completed before that speed is reached.

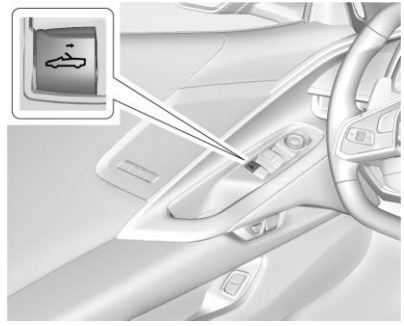

6. Pull and hold on the driver door switch. The windows will automatically lower.
7. After the convertible top is completely closed, a chime sounds and a DIC message displays. Release the switch. Raise the windows if needed. If the switch is held after the chime sounds, the windows will start to raise.

If the radio is on, the sound may be muted for a brief time to automatically adjust the audio after the top is closed.

Troubleshooting the Convertible Top

Check the following if the convertible top switch is not operating:

- The ignition should be on or in accessory mode, or Retained Accessory Power (RAP) should be active.
- The trunk lid must be closed. If it is not, a DIC message will display.
- At cooler outside temperatures, the convertible top may not operate. It is possible to open the top down to temperatures of about 0 °C (32 °F) and close the top down to temperatures of about −10 °C (14 °F). A DIC message will display if the top will not operate due to low temperature. If necessary, move the vehicle to a heated indoor area to operate the top.
- If the top has recently been opened and closed repeatedly, it will be temporarily disabled. A DIC message displays. Normal operation will be restored within 10 minutes after the system has cooled.

- If the vehicle battery is low, the top operation may be disabled. Try to start the vehicle. A DIC message displays.
- If the battery has recently been reconnected or if the vehicle has been jump started, the top may not operate until the power windows have been programmed. Complete the power window programming procedure. See *Power Windows* ⇨ *28*.

Other features may be affected while operating the convertible top:

- If you start the vehicle while using the remote key to open the convertible top, the convertible top will halt the motion. After starting the vehicle, use the convertible top switch inside the vehicle to continue the top motion.
- The windows cannot close while the top is moving.
- When driving with the top not fully secured, chimes can be heard above 50 km/h (31 mph).
- The Rear Camera Mirror will not work with the convertible top down. Use the tab to switch to the standard mirror display.

If the vehicle battery has been disconnected and reconnected, if the fuses were pulled or replaced, or if a jump start was performed, a message indicating the top is not secure may display. Press and release 🔒 and then quickly press and hold on the remote key, or press and hold on the driver door switch to open the top, or pull and hold on the driver door switch to close the top until this message clears.

Partial Top Cycling

If the convertible top operation is stopped before completion, the top will temporarily hold its position. Over time, the tonneau may drift to a near closed position.

Opening the Tonneau Cover — Engine Access

⚠ Warning

When opening or closing the tonneau cover, people can be injured by the moving parts of the tonneau cover. Maintain visual contact with the tonneau cover when it is in motion and keep hands and objects away from the moving parts.

To open the tonneau cover and access the engine:

1. Make sure the vehicle is in P (Park).
2. Ensure the tonneau cover is clear of any objects.
3. The trunk and convertible top must be closed.
4. Keep visual contact with the vehicle. Press and release 🔒 on the remote key and then quickly press and hold . A chime will sound, a DIC message will display, and the turn signals will flash once.

5. Hold until the tonneau cover is completely opened. The turn signals will flash once.

In the event the tonneau cover is partially open, the motion of the tonneau cover will be in the opposite direction upon reactivation.

Closing the Tonneau Cover — Engine Access Function

1. Make sure the vehicle is off.
2. Remove all objects from the engine compartment.
3. The trunk and convertible top must be closed.
4. Keep visual contact with the vehicle. Press and release on the remote key and then quickly press and hold .

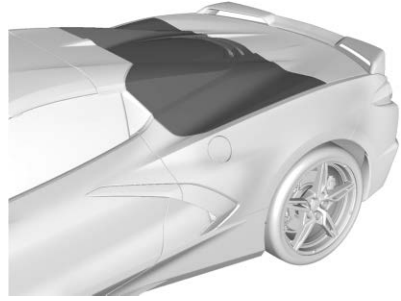

5. Hold until the tonneau cover is completely closed. A chime will sound, a DIC message will display, and the turn signals will flash once.

Troubleshooting the Tonneau Cover — Engine Access

Check the following if the tonneau cover is not operating properly:

- The remote key must be used.
- The ignition must be off.
- The convertible top must be fully closed.
- The remote key may need to be closer to the vehicle.
- Press and release and then quickly press and hold again.

Seats and Restraints

Head Restraints
Head Restraints 38

Front Seats
Power Seat Adjustment 38
Reclining Seatbacks 39
Lumbar Adjustment 40
Memory Seats 40
Heated and Ventilated Front Seats 43

Seat Belts
Seat Belts 44
Buckle To Drive 45
How to Wear Seat Belts Properly 45
Lap-Shoulder Belt 47
Seat Belt Use During Pregnancy 50
Seat Belt Extender 51
Safety System Check 51
Seat Belt Care 51
Replacing Seat Belt System Parts after a Crash 51

Airbag System
Airbag System 52
Where Are the Airbags? 53
When Should an Airbag Inflate? 54
What Makes an Airbag Inflate? 54
How Does an Airbag Restrain? 55
What Will You See after an Airbag Inflates? 55
Passenger Sensing System 56
Servicing the Airbag-Equipped Vehicle 59
Adding Equipment to the Airbag-Equipped Vehicle 59
Airbag System Check 60
Replacing Airbag System Parts after a Crash 60

Child Restraints
Older Children 61
Infants and Young Children 62
Child Restraint Systems 64
Lower Anchors and Tethers for Children (LATCH System) 66
Securing Child Restraints 66

Head Restraints

The vehicle's front seats have head restraints in the outboard seating positions that cannot be adjusted.

The front seat outboard head restraints are not removable.

Front Seats

Power Seat Adjustment

⚠ Warning

The power seats will work with the ignition off. Children could operate the power seats and be injured. Never leave children alone in the vehicle.

⚠ Warning

You can lose control of the vehicle if you try to adjust a driver seat while the vehicle is moving. Adjust the driver seat only when the vehicle is not moving.

To adjust the seat:

- Move the seat forward or rearward by sliding the control forward or rearward.
- Raise or lower the front part of the seat cushion by moving the front of the control up or down. This adjustment will also change the seatback position. Readjustment of the seatback may be required.
- Raise or lower the seat by moving the rear of the control up or down.

To adjust the seatback, see *Reclining Seatbacks* ⇨ *39*.

To adjust the lumbar support, see *Lumbar Adjustment* ⇨ *40*.

Obstructions

If something has blocked the seat during movement, the movement may stop. Remove the obstruction and try the adjustment again. If movement is still not available, see your dealer.

Seat Travel Limit

If the seat or seatback is moved rearward or reclined and makes contact with the carpet behind the seat, the seat will automatically move forward a small distance. The seat movement will stop until all switches are released and reactivated.

Reclining Seatbacks

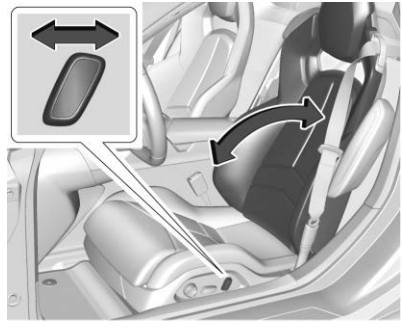

To adjust the seatback:

- Tilt the top of the control rearward to recline.
- Tilt the top of the control forward to raise.

⚠ Warning

Sitting in a reclined position when the vehicle is in motion can be dangerous. Even when buckled up, the seat belts cannot do their job.

For proper protection when the vehicle is in motion, have the seatback upright. Then sit well back in the seat and wear the seat belt properly.

Lumbar Adjustment

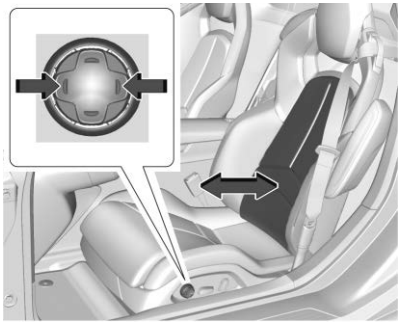

If equipped, press and hold the control forward to increase or rearward to decrease lumbar support.

Bolster Adjustment

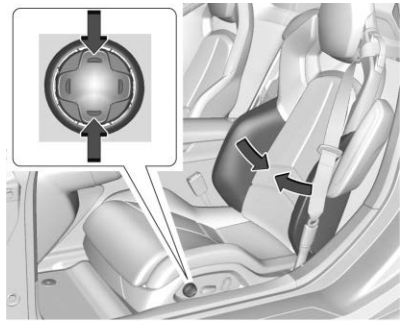

If equipped, press and hold the control upward to increase or downward to decrease the side bolster support.

Memory Seats

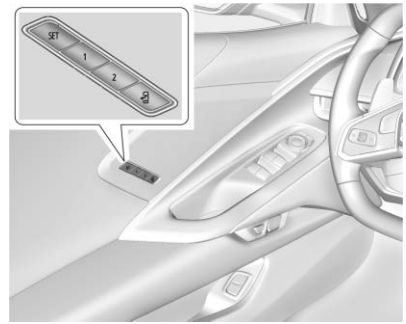

Overview

If equipped, the memory seat feature allows drivers to save their unique driving positions and a shared exit position. See “Saving Seating Positions” later in this section. The saved positions can be recalled manually by all drivers. See “Manually Recalling Seating Positions” later in this section. Drivers with remote key 1 and 2 can also recall them automatically. See “Auto Seat Entry Memory Recall” or “Auto Seat Exit Memory Recall” later in this section. To enable automatic recalls, turn on Seat Entry Memory and/or Seat Exit Memory. See “Enabling Automatic Recalls” later in this section. The memory

recalls may be cancelled at any time during the recall. See “Cancel Memory Seating Recalls” later in this section.

Identifying Driver Number

The vehicle identifies the current driver by their remote key number 1–8. The current remote key number may be identified by Driver Information Center (DIC) welcome message, “You are driver x for memory recalls.” This message is displayed the first few times the vehicle is turned on when a different remote key is used. For Seat Entry Memory to work properly, save positions to the 1 or 2 memory button matching the driver number of this welcome message. To aid in identifying remote key IDs, it is recommended to only carry one remote key when entering the vehicle. Perform the following if the welcome message is not displayed:

1. Move all remote keys away from the vehicle.
2. Start the vehicle with another remote key. A DIC welcome message should display indicating the driver number of the other remote key. Turn the vehicle off and remove the other remote key from the vehicle.
3. Start the vehicle with the initial remote key. The DIC welcome message should display the driver number of the initial remote key.

Saving Seating Positions

Read these instructions completely before saving memory positions.

To save preferred driving positions to 1 and 2:

1. Turn the vehicle on. A DIC welcome message may indicate the driver number of the current remote key. See “Identifying Driver Number” previously in this section.
2. Adjust all available memory features to the desired driving position.
3. Press and release SET; a beep will sound.
4. Immediately upon releasing SET, press and hold memory button 1 or 2 matching the current Driver’s remote key number until two beeps sound. If too much time passes between releasing SET and pressing 1 or 2, the two beeps will not sound indicating memory position were not saved. Repeat Steps 3 and 4 to try again.
5. Repeat Steps 1–4 for the other remote key 1 or 2 using the other 1 or 2 memory button.

It is recommended to save the preferred driving positions to both 1 and 2 if you are the only driver.

To save the common exit seating position to that is used by all drivers for Manually Recalling Seating Positions and Auto Seat Exit Memory Recall features, repeat Steps 1–4 using , the exit button.

Manually Recalling Seating Positions

Press and hold 1, 2, or button until the recall is complete, to recall the positions previously saved to that button.

Manual Memory recall movement for 1, 2 or buttons may be initiated and will complete to the saved memory position if the vehicle is in or out of P (Park).

Enabling Automatic Recalls

- Seat Entry Memory moves the driver seat to the selected 1 or 2 position when the vehicle is started. Select Settings > Vehicle > Seating Position > Seat Entry Memory > ON or OFF. See “Auto Seat Entry Memory Recall” later in this section.

- Seat Exit Memory moves the driver seat to the preferred exit position of the button when the vehicle is turned off and the door is opened. Select Settings > Vehicle > Seating Position > Seat Exit Memory > Select ON or OFF. See "Auto Seat Exit Memory Recall" later in this section.

Auto Seat Entry Memory Recall

Seat Entry Memory will automatically begin movement to the seating positions of the 1 or 2 button corresponding to the driver's remote key number 1 or 2 detected by the vehicle when:

- The vehicle is turned ON.
- Seating positions have been previously saved to the same 1 or 2 button. See "Saving Seating Positions" previously in this section.
- Seat Entry Memory is enabled. See "Enabling Automatic Recalls" previously in this section.
- The vehicle is in P (Park).

Seat Entry Memory Recall will continue if the vehicle is shifted out of P (Park) prior to reaching the saved memory position.

If the saved memory seat position does not automatically recall, verify the recall is enabled. See "Enabling Automatic Recalls" previously in this section.

If the memory seat recalls to the wrong position, the driver's remote key number 1 or 2 may not match the memory button number positions they were saved to. Try the other remote key or try saving the positions to the other 1 or 2 memory button. See "Saving Seating Positions" previously in this section.

Automatic Seat Entry Memory recalls are only available for driver's remote key numbers 1 and 2. Remote keys 3–8 will not provide Seat Entry Memory recalls.

Auto Seat Exit Memory Recall

Seat Exit Memory will begin movement to the seating position of the button when:

- The vehicle is turned off and the driver door is open or opened within a short time.
- A seating position has been previously been saved to the memory button. See "Saving Seating Positions" previously in this section.
- Seat Exit Memory is enabled. See "Enabling Automatic Recalls" previously in this section.
- The vehicle is in P (Park).

Seat Exit Memory recall will continue if the vehicle is shifted out of P (Park) prior to reaching the saved memory position.

Seat Exit Memory is not linked to the driver's remote key. The seating position saved to is used for all drivers.

Cancel Memory Seating Recalls

- During any memory recall:

  Press a power seat control

  Press SET memory button
- During Manual memory recall:

  Release 1, 2, or memory button
- During Auto Seat Entry Memory Recall:

  Turn vehicle off

  Press SET, 1, 2, or memory buttons
- During Auto Seat Exit Memory Recall:

  Press SET, 1, 2, or memory buttons

Obstructions

If something has blocked the seat while recalling a memory position, the recall may stop. Remove the obstruction and try the recall again. If the memory position still does not recall, see your dealer.

Heated and Ventilated Front Seats

⚠ Warning

If temperature change or pain to the skin cannot be felt, the seat heater may cause burns. To reduce the risk of burns, use care when using the seat heater, especially for long periods of time. Do not place anything on the seat that insulates against heat, such as a blanket, cushion, cover, or similar item. This may cause the seat heater to overheat. An overheated seat heater may cause a burn or may damage the seat.

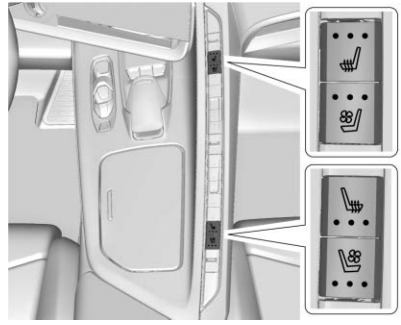

If equipped, the buttons are near the climate controls on the console. To operate, the engine must be running.

Press ⊘ or ⊘ to heat the driver or passenger seat.

Press ⊘ or ⊘, if equipped, to ventilate the driver or passenger seat. A ventilated seat has a fan that pulls or pushes air through the seat. The air is not cooled.

Press the button once for the highest setting. With each press of the button, the seat will change to the next lower setting, and then to the off setting. The indicator lights show three for the highest setting and one for the lowest. If the heated seats are on high, the level may automatically be lowered after approximately 30 minutes.

The passenger seat may take longer to heat up.

Auto Heated and Ventilated Seats

If the vehicle is equipped with auto heated or ventilated seats, and the engine is running, this feature will automatically activate the heated or ventilated seats at the level required by the vehicle's interior temperature.

The active high, medium, low, or off heated or ventilated seat level will be indicated by the manual heated and ventilated seat buttons on the console.

Use the manual heated and ventilated seat buttons on the console to turn auto heated or ventilated seats off. If the passenger seat is unoccupied, the auto heated or ventilated seats feature will not activate that seat. To enable or disable auto heated or ventilated seats, select Settings > Vehicle > Climate and Air Quality > Auto Cooled or Auto Heated Seats > ON or OFF.

If equipped with a heated steering wheel, the auto heated steering wheel activation will follow the heated seat auto activation and the heated wheel indicator will follow the state of the steering wheel heat.

Remote Start Heated and Ventilated Seats

During a remote start (if equipped), the heated or ventilated seats can be turned on automatically. When it is cold outside, the heated seats turn on, and when it is hot outside the ventilated seats turn on. The heated and ventilated seat indicators and heated steering wheel indicator may come on during this operation. The heated or ventilated seats are canceled when the vehicle is turned on. Press the heated or ventilated seat button to use the heated or ventilated seats after the vehicle is started.

The temperature performance of an unoccupied seat may be reduced. This is normal.

To enable or disable remote start heated or ventilated seats, select Settings > Vehicle > Remote Lock, Unlock, and Start > Remote Start Auto Heat Seats or Remote Start Auto Cool Seats > ON or OFF. See *Remote Vehicle Start* ⇨ *12*.

Seat Belts

This section describes how to use seat belts properly, and some things not to do.

⚠ Warning

Do not let anyone ride where a seat belt cannot be worn properly. In a crash, if you or your passenger(s) are not wearing seat belts, injuries can be much worse than if you are wearing seat belts. You can be seriously injured or killed by hitting things inside the vehicle harder or by being ejected from the vehicle. In addition, anyone who is not buckled up can strike other passengers in the vehicle.

It is extremely dangerous to ride in a cargo area, inside or outside of a vehicle. In a collision, passengers riding in these areas are more likely to be seriously injured or killed. Do not allow passengers to ride in any area of the vehicle that is not equipped with seats and seat belts.

Always wear a seat belt, and check that all passenger(s) are restrained properly too.

This vehicle has indicators as a reminder to buckle the seat belts. See *Seat Belt Reminders* ⇨ *84*.

Why Seat Belts Work

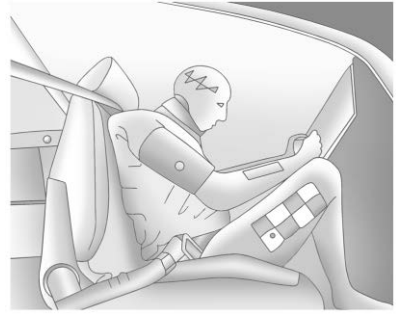

When riding in a vehicle, you travel as fast as the vehicle does. If the vehicle stops suddenly, you keep going until something stops you. It could be the windshield, the instrument panel, or the seat belts!

When you wear a seat belt, you and the vehicle slow down together. There is more time to stop because you stop over a longer distance and, when worn properly, your strongest bones take the forces from the seat belts. That is why wearing seat belts makes such good sense.

Questions and Answers About Seat Belts

Q: Will I be trapped in the vehicle after a crash if I am wearing a seat belt?

A: You *could* be — whether you are wearing a seat belt or not. Your chance of being conscious during and after a crash, so you *can* unbuckle and get out, is *much* greater if you are belted.

Q: If my vehicle has airbags, why should I have to wear seat belts?

A: Airbags are supplemental systems only. They work *with* seat belts — not instead of them. Whether or not an airbag is provided, all occupants still have to buckle up to get the most protection.

Also, in nearly all states and in all Canadian provinces, the law requires wearing seat belts.

Buckle To Drive

If equipped, this feature prevents the vehicle from shifting out of P (Park) when the driver seat belt is not buckled. The Buckle to Drive feature must be turned ON in the infotainment system to work. To turn the Buckle to Drive feature on or off, select Settings > Vehicle > Buckle to Drive. See *Teen Driver* ⇨ *153*, if equipped.

If the vehicle is on and the brake pedal is pressed with the vehicle in P (Park) but the driver seat belt is not buckled, a message displays in the Driver Information Center (DIC) and the vehicle will be prevented from shifting out of P (Park). Buckle the driver seat belt to clear the message and shift out of P (Park). Shifting from P (Park) will be prevented once for each time the vehicle is started.

For some fleet vehicles, the feature is always ON and cannot be turned OFF in the infotainment system. The vehicle will be prevented from shifting from P (Park) each time the driver attempts to do so while the driver seat belt is not buckled. Turning the vehicle off then on will not change this condition.

On some models, Buckle to Drive may also prevent shifting out of P (Park) if a front passenger seat belt is unbuckled. A message displays in the DIC. Buckle the front passenger seat belt to shift out of P (Park). This feature may not allow the vehicle to shift out of P (Park) if an object, such as a briefcase, handbag, grocery bag, laptop, or other electronic device, is on the front passenger seat. If this happens, remove the object from the seat or buckle the seat belt to shift out of P (Park).

If the driver, or on some vehicles, the present front passenger remains unbuckled, the DIC message will turn off after several seconds and the vehicle can be shifted out of P (Park). See “Seat Belts” and “Child Restraints” in the Index for information about the importance of proper restraint use.

If the driver seat belt or the front passenger seat belt is unbuckled when driving, the seat belt reminder chime and light(s) will come on. See *Seat Belt Reminders* ⇨ *84*. This feature may not function properly if the airbag readiness light is on. See *Airbag Readiness Light* ⇨ *84*.

How to Wear Seat Belts Properly

Follow these rules for everyone's protection.

There are additional things to know about seat belts and children, including smaller children and infants. If a child will be riding in the vehicle, see *Older Children* ⇨ *61* or *Infants and Young Children* ⇨ *62*. Review and follow the rules for children in addition to the following rules.

It is very important for all occupants to buckle up. Statistics show that unbelted people are hurt more often in crashes than those who are wearing seat belts.

There are important things to know about wearing a seat belt properly.

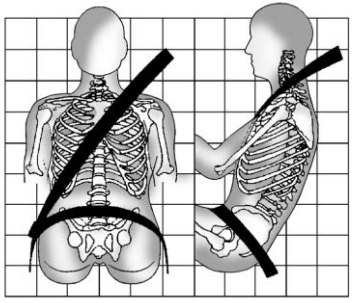

- Sit up straight and always keep your feet on the floor in front of you (if possible).
- Wear the lap part of the belt low and snug on the hips, just touching the thighs. In a crash, this applies force to the strong pelvic bones and you would be less likely to slide under the lap belt. If you slid under it, the belt would apply force on your abdomen. This could cause serious or even fatal injuries.
- Wear the shoulder belt over the shoulder and across the chest. These parts of the body are best able to take belt restraining forces. The shoulder belt locks if there is a sudden stop or crash.

⚠ Warning

You can be seriously injured, or even killed, by not wearing your seat belt properly.

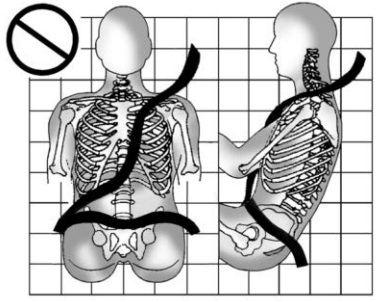

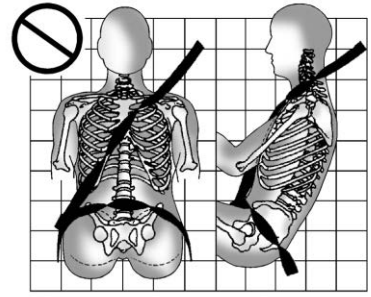

Never allow the lap or shoulder belt to become loose or twisted.

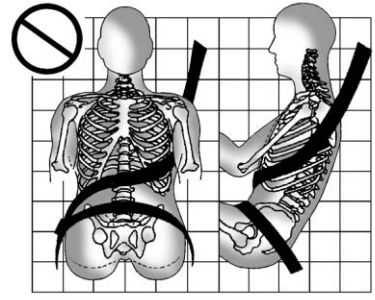

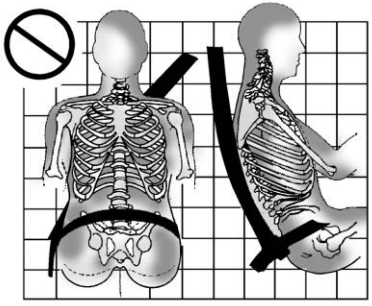

Never wear the shoulder belt under both arms or behind your back.

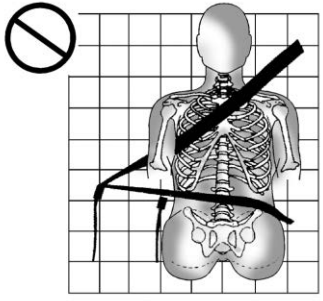

Always use the correct buckle for your seating position.

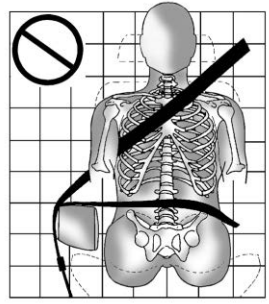

Never route the lap or shoulder belt over an armrest.

⚠ Warning

The seat belt can be pinched if it is routed under plastic trim on the seat, such as trim around the rear seatback folding handle or side airbag. In a crash, pinched seat belts might not provide adequate protection. Never allow seat belts to be routed under plastic trim pieces.

⚠ Warning

You can be seriously injured or killed if the shoulder belt is worn behind your back, under your legs, or wrapped around your neck. The shoulder belt can tighten but cannot be loosened if it is locked. The shoulder belt locks when it is pulled all the way out of the retractor. It unlocks when the shoulder belt is allowed to go all the way back into the retractor, but it cannot do this if it is wrapped around you. You may have to cut the seat belt if it is locked and tightened around you.

Lap-Shoulder Belt

All seating positions in the vehicle have a lap-shoulder belt.

The following instructions explain how to wear a lap-shoulder belt properly.

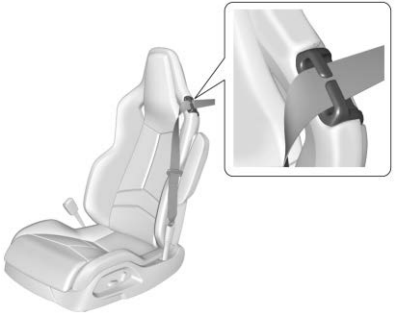

GT1 Seat

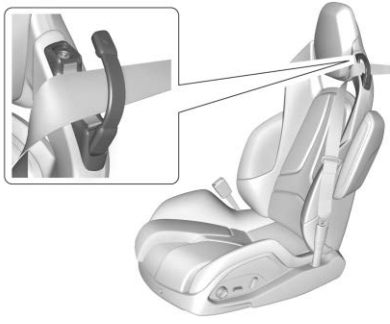

GT2/Competition Seat

1. The seat has a seat belt guide. The seat belt must be routed through the guide to properly position the shoulder belt on occupants whose shoulder is below the guide when seated. To use the seat belt guide:

   GT1 Seat: Slide the edge of the belt webbing through the opening on the guide. Be sure the belt is not twisted. If a child will be riding in the vehicle, see *Older Children* ⇨ *61* or *Infants and Young Children* ⇨ *62*.

   GT2/Competition Seat: Unsnap the guide to open it. Route the seat belt webbing onto the open guide and snap the guide closed. Be sure the belt is not twisted. If a child will be riding in the vehicle, see *Older Children* ⇨ *61* or *Infants and Young Children* ⇨ *62*.

2. Adjust the seat, if the seat is adjustable, so you can sit up straight. To see how, see "Seats" in the Index.

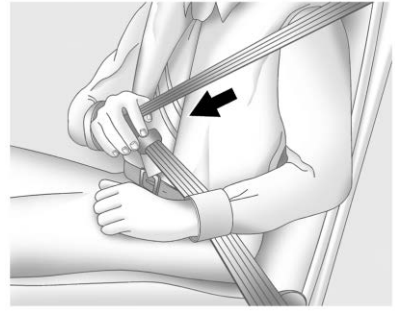

3. Pick up the latch plate and pull the belt across you. Do not let it get twisted.

   The lap-shoulder belt may lock if you pull the belt across you very quickly. If this happens, let the belt go back slightly to unlock it. Then pull the belt across you more slowly.

   If the shoulder portion of a passenger belt is pulled out all the way, the child restraint locking feature may be engaged. See *Child Restraint Systems* ⇨ *64*. If this occurs, let the belt go back all the way and start again. If the locking feature stays engaged after letting the belt go back to stowed

position on the seat, move the seat rearward or recline the seat until the shoulder belt retractor lock releases.

Engaging the child restraint locking feature in the front outboard seating position may affect the passenger sensing system. See *Passenger Sensing System* ⇨ *56*.

If the shoulder portion of the driver belt is pulled out all the way, the shoulder belt retractor lock feature may be engaged. If this happens, let the belt go back all the way and start again. If the locking feature stays engaged after letting the belt go back to stowed position on the seat, move the seat rearward or recline the seat until the shoulder belt retractor lock releases.

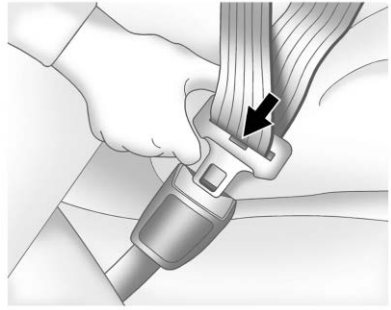

4. Push the latch plate into the buckle until it clicks.

   Pull up on the latch plate to make sure it is secure. If the belt is not long enough, see *Seat Belt Extender* ⇨ *51*.

   Position the release button on the buckle so that the seat belt could be quickly unbuckled if necessary.

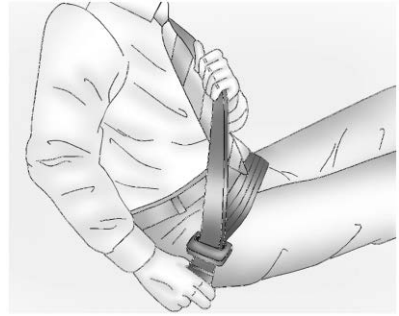

5. To make the lap part tight, pull up on the shoulder belt.

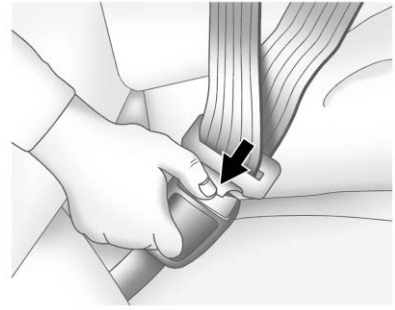

To unlatch the belt, push the button on the buckle. The belt should return to its stowed position.

Always stow the seat belt slowly. If the seat belt webbing returns quickly to the stowed position, the retractor may lock and cannot be pulled out. If this happens, pull the seat belt straight out firmly to unlock the webbing, and then release it. If the webbing is still locked in the retractor, see your dealer.

Before a door is closed, be sure the seat belt is out of the way. If a door is slammed against a seat belt, damage can occur to both the seat belt and the vehicle.

Seat Belt Pretensioners

This vehicle has seat belt pretensioners for the front outboard occupants. Although the seat belt pretensioners cannot be seen, they are part of the seat belt assembly. They can help tighten the seat belts during the early stages of a moderate to severe frontal, near frontal, or rear crash if the threshold conditions for pretensioner activation are met. Seat belt pretensioners can also help tighten the seat belts in a side crash or a rollover event.

Pretensioners work only once. If the pretensioners activate in a crash, the pretensioners and probably other parts of the vehicle's seat belt system will need to be replaced. See *Replacing Seat Belt System Parts after a Crash* ⇨ *51*.

Do not sit on the outboard seat belt while entering or exiting the vehicle or at any time while sitting in the seat. Sitting on the seat belt can damage the webbing and hardware.

Seat Belt Use During Pregnancy

Seat belts work for everyone, including pregnant women. Like all occupants, they are more likely to be seriously injured if they do not wear seat belts.

A pregnant woman should wear a lap-shoulder belt, and the lap portion should be worn as low as possible, below the rounding, throughout the pregnancy.

The best way to protect the fetus is to protect the mother. When a seat belt is worn properly, it is more likely that the fetus will not be hurt in a crash. For pregnant women, as for anyone, the key to making seat belts effective is wearing them properly.

Seat Belt Extender

If the vehicle's seat belt will fasten around you, you should use it.

But if a seat belt is not long enough, your dealer will order you an extender. Only a GM dealer issued extender should be used. When you go in to order it, take the heaviest coat you will wear, so the extender will be long enough for you. To help avoid personal injury, do not let someone else use it, and use it only for the seat it is made to fit. The extender has been designed for adults. Never use it for securing child restraints. For more information on the proper use and fit of seat belt extenders see the instruction sheet that comes with the extender.

Safety System Check

Periodically check the seat belt reminder, seat belts, buckles, latch plates, retractors, shoulder belt height adjusters (if equipped), and seat belt anchorages to make sure they are all in working order. Look for any other loose or damaged seat belt system parts that might keep a seat belt system from performing properly. See your dealer to have it repaired. Torn, frayed, or twisted seat belts may not protect you in a crash. Torn or frayed seat belts can rip apart under impact forces. If a belt is torn or frayed, have it replaced immediately. If a belt is twisted, it may be possible to untwist by reversing the latch plate on the webbing. If the twist cannot be corrected, ask your dealer to fix it.

Make sure the seat belt reminder light is working. See *Seat Belt Reminders* ⇨ *84*.

Keep seat belts clean and dry. See *Seat Belt Care* ⇨ *51*.

Seat Belt Care

Keep belts clean and dry.

Seat belts should be properly cared for and maintained.

Seat belt hardware should be kept dry and free of dust or debris. As necessary, exterior hard surfaces and seat belt webbing may be lightly cleaned with mild soap and water. Ensure there is not excessive dust or debris in the mechanism. If dust or debris exists in the system please see the dealer. Parts may need to be replaced to ensure proper functionality of the system.

⚠ Warning

Do not bleach or dye seat belt webbing. It may severely weaken the webbing. In a crash, they might not be able to provide adequate protection. Clean and rinse seat belt webbing only with mild soap and lukewarm water. Allow the webbing to dry.

Replacing Seat Belt System Parts after a Crash

⚠ Warning

A crash can damage the seat belt system in the vehicle. A damaged seat belt system may not properly protect the person using it, resulting in serious injury or even death in a crash. To help make sure the seat belt systems are working properly after a crash, have them inspected and any necessary replacements made as soon as possible.

After a minor crash, replacement of seat belts may not be necessary. But the seat belt assemblies that were used during any crash may have been stressed or damaged.

See your dealer to have the seat belt assemblies and seat belt guides inspected or replaced.

New parts and repairs may be necessary even if the seat belt system was not being used at the time of the crash.

Have the seat belt pretensioners checked if the vehicle has been in a crash, or if the airbag readiness light stays on after you start the vehicle or while you are driving. See *Airbag Readiness Light* ⇨ *84*.

Airbag System

The vehicle has the following airbags:

- A frontal airbag for the driver
- A frontal airbag for the front outboard passenger
- A seat-mounted side impact airbag for the driver
- A seat-mounted side impact airbag for the front outboard passenger

All vehicle airbags have the word AIRBAG on the trim or on a label near the deployment opening.

For frontal airbags, the word AIRBAG is on the center of the steering wheel for the driver and on the instrument panel for the front outboard passenger.

For seat-mounted side impact airbags, the word AIRBAG is on the side of the seatback or side of the seat closest to the door.

Airbags are designed to supplement the protection provided by seat belts. Even though today's airbags are also designed to help reduce the risk of injury from the force of an inflating bag, all airbags must inflate very quickly to do their job.

Here are the most important things to know about the airbag system:

⚠ Warning

You can be severely injured or killed in a crash if you are not wearing your seat belt, even with airbags. Airbags are designed to work with seat belts, not replace them. Also, airbags are not designed to inflate in every crash. In some crashes seat belts are the only restraint. See *When Should an Airbag Inflate?* ⇨ *54*.

(Continued)

Warning (Continued)

Wearing your seat belt during a crash helps reduce your chance of hitting things inside the vehicle or being ejected from it. Airbags are “supplemental restraints” to the seat belts. Everyone in the vehicle should wear a seat belt properly, whether or not there is an airbag for that person.

⚠ Warning

Because airbags inflate with great force and faster than the blink of an eye, anyone who is up against, or very close to, any airbag when it inflates can be seriously injured or killed. Do not sit unnecessarily close to any airbag, as you would be if sitting on the edge of the seat or leaning forward. Seat belts help keep you in position before and during a crash. Always wear the seat belt, even with airbags. The driver should sit as far back as possible while still maintaining control of the vehicle. The seat belts and the front outboard passenger airbags are

(Continued)

Warning (Continued)

most effective when you are sitting well back and upright in the seat with both feet on the floor.

Occupants should not lean on or sleep against the door or side windows in seating positions with seat-mounted airbags.

⚠ Warning

Children who are up against, or very close to, any airbag when it inflates can be seriously injured or killed. Always secure children properly in the vehicle. To read how, see *Older Children* ⇨ *61* or *Infants and Young Children* ⇨ *62*.

There is an airbag readiness light on the instrument cluster which shows the airbag symbol.

The system checks the airbag electrical system for malfunctions. The light tells you if there is an electrical problem. See *Airbag Readiness Light* ⇨ *84*.

Where Are the Airbags?

The driver frontal airbag is in the center of the steering wheel.

The front outboard passenger frontal airbag is in the passenger side instrument panel.

Driver Side Shown, Passenger Side Similar

The driver and front outboard passenger seat-mounted side impact airbags are in the side of the seatbacks closest to the door.

⚠ Warning

If something is between an occupant and an airbag, the airbag might not inflate properly or it might force the object into that person causing severe injury or even death. The path of an inflating airbag must be kept clear. Do not put anything between an occupant and an airbag, and do not attach or put anything on the steering wheel hub or on or near any other airbag covering.

Do not use seat accessories that block the inflation path of a seat-mounted side impact airbag.

When Should an Airbag Inflate?

This vehicle is equipped with airbags. See *Airbag System* ⇨ *52*. Airbags are designed to inflate if the impact exceeds the specific airbag system's deployment threshold. Deployment thresholds are used to predict how severe a crash is likely to be in time for the airbags to inflate and help restrain the occupants. The vehicle has electronic sensors that help the airbag system determine the severity of the impact. Deployment thresholds can vary with specific vehicle design.

Frontal airbags are designed to inflate in moderate to severe frontal crashes to help reduce the potential for severe injuries, mainly to the driver's or front outboard passenger's head and chest.

Whether the frontal airbags will or should inflate is not based primarily on how fast the vehicle is traveling. It depends on what is hit, the direction of the impact, and how quickly the vehicle slows down.

Frontal airbags may inflate at different crash speeds depending on whether the vehicle hits an object straight on or at an angle, and whether the object is fixed or moving, rigid or deformable, narrow or wide.

Frontal airbags are not intended to inflate during vehicle rollovers, in rear impacts, or in many side impacts.

In addition, the vehicle has advanced technology frontal airbags. Advanced technology frontal airbags adjust the restraint according to crash severity or occupant interaction.

Seat-mounted side impact airbags are designed to inflate in moderate to severe side crashes depending on the location of the impact. These airbags may also inflate in some moderate to severe frontal impacts. Seat-mounted side impact airbags are not designed to inflate in rollovers or rear impacts. A seat-mounted side impact airbag is designed to inflate on the side of the vehicle that is struck.

In any particular crash, no one can say whether an airbag should have inflated simply because of the vehicle damage or repair costs.

What Makes an Airbag Inflate?

In a deployment event, the sensing system sends an electrical signal triggering a release of gas from the inflator. Gas from the inflator fills the airbag causing the bag to break out of the cover. The inflator, the airbag, and related hardware are all part of the airbag module.

For airbag locations, see *Where Are the Airbags?* ⇨ *53*.

How Does an Airbag Restrain?

In moderate to severe frontal or near frontal collisions, even belted occupants can contact the steering wheel or the instrument panel. In moderate to severe side collisions, even belted occupants can contact the inside of the vehicle.

Airbags supplement the protection provided by seat belts by distributing the force of the impact more evenly over the occupant's body.

But airbags would not help in many types of collisions, primarily because the occupant's motion is not toward those airbags. See *When Should an Airbag Inflate?* ⇨ *54*.

Airbags should never be regarded as anything more than a supplement to seat belts.

What Will You See after an Airbag Inflates?

After the frontal and seat-mounted side impact airbags inflate, they quickly deflate, so quickly that some people may not even realize the airbags inflated. Some components of the airbag module may be hot for several minutes. For location of the airbags, see *Where Are the Airbags?* ⇨ *53*.

The parts of the airbag that come into contact with you may be warm, but not too hot to touch. There may be some smoke and dust coming from the vents in the deflated airbags. Airbag inflation does not prevent the driver from seeing out of the windshield or being able to steer the vehicle, nor does it prevent people from leaving the vehicle.

⚠ Warning

When an airbag inflates, there may be dust in the air. This dust could cause breathing problems for people with a history of asthma or other breathing trouble. To avoid this, everyone in the vehicle should get out as soon as it is safe to do so. If you have breathing problems but cannot get out of the vehicle after an airbag inflates, then get fresh air by opening a window or a door. If you experience breathing problems following an airbag deployment, you should seek medical attention.

The vehicle has a feature that may automatically unlock the doors, turn on the interior lamps and hazard warning flashers, and shut off the fuel system after the airbags inflate. The feature may also activate, without airbag inflation, after an event that exceeds a predetermined threshold. After turning the ignition off and then on again, the fuel system will return to normal operation; the doors can be locked, the interior lamps can be turned off, and the hazard warning flashers can be turned off using the controls for those features. If any of these systems are damaged in the crash they may not operate as normal.

⚠ Warning

A crash severe enough to inflate the airbags may have also damaged important functions in the vehicle, such as the fuel system, brake and steering systems, etc. Even if the vehicle appears to be drivable after a moderate crash, there may be concealed damage that could make it difficult to safely operate the vehicle.

(Continued)

Warning (Continued)

Use caution if you should attempt to restart the engine after a crash has occurred.

In many crashes severe enough to inflate the airbag, windshields are broken by vehicle deformation. Additional windshield breakage may also occur from the front outboard passenger airbag.

- Airbags are designed to inflate only once. After an airbag inflates, you will need some new parts for the airbag system. If you do not get them, the airbag system will not be there to help protect you in another crash. A new system will include airbag modules and possibly other parts. The service manual for the vehicle covers the need to replace other parts.
- The vehicle has a crash sensing and diagnostic module which records information after a crash. See *Vehicle Data Recording and Privacy* ⇨ *328* and *Event Data Recorders* ⇨ *329*.
- Let only qualified technicians work on the airbag system. Improper service can mean that the airbag system will not work properly. See your dealer for service.

Passenger Sensing System

The vehicle has a passenger sensing system for the front outboard passenger position. The passenger airbag status indicator will light on the overhead console when the vehicle is started.

United States

Canada and Mexico

The words ON and OFF, or the symbols for on and off, will be visible during the system check.

When the system check is complete, either the word ON or OFF, or the symbol for on or off, will be visible. See *Passenger Airbag Status Indicator* ⇨ *85*.

The passenger sensing system turns off the front outboard passenger frontal airbag under certain conditions. No other airbag is affected by the passenger sensing system.

The passenger sensing system works with sensors that are part of the front outboard passenger seat and seat belt.

The sensors are designed to detect the presence of a properly-seated occupant and determine if the front outboard passenger frontal airbag should be allowed to inflate or not.

According to accident statistics, children are safer when properly secured in a rear seat in the correct child restraint for their weight and size.

Rear-facing child restraints should not be transported in the vehicle, even if the airbag is off.

Never put a rear-facing child seat in the front. This is because the risk to the rear-facing child is so great, if the airbag inflates.

⚠ Warning

A child in a rear-facing child restraint can be seriously injured or killed if the passenger frontal airbag inflates. This is because the back of the rear-facing child restraint would be very close to the inflating airbag. A child in a forward-facing child restraint can be seriously injured or killed if the passenger frontal airbag inflates and the passenger seat is in a forward position.

Even if the passenger sensing system has turned off the passenger frontal airbag, no system is fail-safe. No one can guarantee that an airbag will not inflate under some unusual circumstance, even though the airbag is off.

Never put a rear-facing child restraint in the front seat, even if the airbag is off. If securing a forward-facing child restraint in the front outboard passenger seat, always move the seat as far back as it will go. It is better to secure child restraints in the rear seat. Consider using another vehicle to transport the child when a rear seat is not available.

The passenger sensing system is designed to turn off the front outboard passenger frontal airbag if:

- The front outboard passenger seat is unoccupied.
- The system determines an infant is present in a child restraint.
- A front outboard passenger takes his/her weight off of the seat for a period of time.

When the passenger sensing system has turned off the front outboard passenger frontal airbag, the OFF indicator will light and stay lit as a reminder that the airbag is off. See *Passenger Airbag Status Indicator* ⇨ *85*.

The passenger sensing system is designed to turn on the front outboard passenger frontal airbag anytime the system senses that a person of adult size is sitting properly in the front outboard passenger seat.

When the passenger sensing system has allowed the airbag to be enabled, the ON indicator will light and stay lit as a reminder that the airbag is active.

For some children, including children in child restraints, and for very small adults, the passenger sensing system may or may not turn off the front outboard passenger frontal airbag, depending upon the person's seating posture and body build. Everyone in the vehicle who has outgrown child restraints should wear a seat belt properly — whether or not there is an airbag for that person.

⚠ Warning

If the airbag readiness light ever comes on and stays on, it means that something may be wrong with the airbag system. To help avoid injury to yourself or others, have the vehicle serviced right away. See *Airbag Readiness Light* ⇨ *84* for more information, including important safety information.

If the On Indicator Is Lit for a Child Restraint

The passenger sensing system is designed to turn off the front outboard passenger frontal airbag if the system determines that an infant is present in a child restraint. If a child restraint has been installed and the ON indicator is lit:

1. Turn the vehicle off.

2. Remove the child restraint from the vehicle.
3. Remove any additional items from the seat such as blankets, cushions, seat covers, seat heaters, or seat massagers.
4. Reinstall the child restraint following the directions provided by the child restraint manufacturer and refer to *Securing Child Restraints* ⇨ *66*.

   Make sure the seat belt retractor is locked by pulling the shoulder belt all the way out of the retractor when installing the child restraint, even if the child restraint is equipped with a seat belt lock-off. When the retractor lock is set, the belt can be tightened but not pulled out of the retractor.
5. If, after reinstalling the child restraint and restarting the vehicle, the ON indicator is still lit, turn the vehicle off. Then slightly recline the vehicle seatback and adjust the seat cushion, if adjustable, to make sure that the vehicle seatback is not pushing the child restraint into the seat cushion.
6. Restart the vehicle.

The passenger sensing system may or may not turn off the airbag for a child in a child restraint depending upon the child's size. It is better to secure child restraints in a rear seat. Consider using another vehicle to transport the child when a rear seat is not available. Never put a rear-facing child restraint in the front seat, even if the ON indicator is not lit.

If the Off Indicator Is Lit for an Adult-Sized Occupant

If a person of adult size is sitting in the front outboard passenger seat, but the OFF indicator is lit, it could be because that person is not sitting properly in the seat or that the child restraint locking feature is engaged. Use the following steps to allow the system to detect that person and enable the front outboard passenger frontal airbag:

1. Turn the vehicle off.
2. Remove any additional material from the seat, such as blankets, cushions, seat covers, seat heaters, or seat massagers.
3. Place the seatback in the fully upright position.
4. Have the person sit upright in the seat, centered on the seat cushion, with legs comfortably extended.
5. If the shoulder portion of the belt is pulled out all the way, the child restraint locking feature will be engaged. This may unintentionally cause the passenger sensing system to turn the airbag off for some adult-sized occupants. If this happens, unbuckle the belt, let the belt go back all the way, and then buckle the belt again without pulling the belt out all the way.
6. Restart the vehicle and have the person remain in this position for two to three minutes after the ON indicator is lit.

⚠ Warning

If the front outboard passenger airbag is turned off for an adult-sized occupant, the airbag will not be able to inflate and help protect that person in a crash, resulting in an increased risk of serious injury or even death. An adult-sized occupant should not ride in the front outboard passenger seat, if the passenger airbag OFF indicator is lit.

Additional Factors Affecting System Operation

Seat belts help keep the passenger in position on the seat during vehicle maneuvers and braking, which helps the passenger sensing system maintain the passenger airbag status. See “Seat Belts” and “Child Restraints” in the Index for additional information about the importance of proper restraint use.

A thick layer of additional material, such as a blanket or cushion, or aftermarket equipment such as seat covers, seat heaters, and seat massagers can affect how well the passenger sensing system operates. We recommend that you not use seat covers or other aftermarket equipment except when approved by GM for your specific vehicle. See *Adding Equipment to the Airbag-Equipped Vehicle* ⇨ *59* for more information about modifications that can affect how the system operates.

The ON indicator may be lit if an object, such as a briefcase, handbag, grocery bag, laptop, or other electronic device, is put on an unoccupied seat. If this is not desired, remove the object from the seat.

⚠ Warning

Stowing articles under the passenger seat or between the passenger seat cushion and seatback may interfere with the proper operation of the passenger sensing system.

Servicing the Airbag-Equipped Vehicle

Airbags affect how the vehicle should be serviced. There are parts of the airbag system in several places around the vehicle. Your dealer and the service manual have information about servicing the vehicle and the airbag system. To purchase a service manual, see *Publication Ordering Information* ⇨ *327*.

⚠ Warning

For up to 10 seconds after the vehicle is turned off and the battery is disconnected, an airbag can still inflate during improper service. You can be injured if you are close to an airbag when it inflates. Avoid yellow connectors. They are probably part of the airbag system. Be sure to follow proper service procedures, and make sure the person performing work for you is qualified to do so.

Adding Equipment to the Airbag-Equipped Vehicle

Adding accessories that change the vehicle's frame, bumper system, height, front end, or side sheet metal may keep the airbag system from working properly.

The operation of the airbag system can also be affected by changing, including improperly repairing or replacing, any parts of the following:

- Airbag system, including airbag modules, front or side impact sensors, sensing and diagnostic module, or airbag wiring

- Front seats, including stitching, seams or zippers
- Seat belts
- Steering wheel, instrument panel, ceiling trim, or pillar garnish trim
- Inner door seals, including speakers

Your dealer and the service manual have information about the location of the airbag modules and sensors, sensing and diagnostic module, and airbag wiring along with the proper replacement procedures.

In addition, the vehicle has a passenger sensing system for the front outboard passenger position, which includes sensors that are part of the passenger seat. The passenger sensing system may not operate properly if the original seat trim is replaced with non-GM covers, upholstery or trim, or with GM covers, upholstery or trim designed for a different vehicle. Any object, such as an aftermarket seat heater or a comfort-enhancing pad or device, installed under or on top of the seat fabric, could also interfere with the operation of the passenger sensing system. This could either prevent proper deployment of the passenger airbag(s) or prevent the passenger sensing system from properly turning off the passenger airbag(s). See *Passenger Sensing System* ⇨ *56*.

If the vehicle must be modified because you have a disability and have questions about whether the modifications will affect the vehicle's airbag system, or if you have questions about whether the airbag system will be affected if the vehicle is modified for any other reason, call Customer Assistance. See *Customer Assistance Offices* ⇨ *321*.

Airbag System Check

The airbag system does not need regularly scheduled maintenance or replacement. Make sure the airbag readiness light is working. See *Airbag Readiness Light* ⇨ *84*.

Caution

If an airbag covering is damaged, opened, or broken, the airbag may not work properly. Do not open or break the airbag coverings. If there are any opened or broken airbag coverings, have the airbag covering and/or airbag module replaced. For the location of the airbags, see *Where Are the Airbags?* ⇨ *53*. See your dealer for service.

Replacing Airbag System Parts after a Crash

⚠ Warning

A crash can damage the airbag systems in the vehicle. A damaged airbag system may not properly protect you and your passenger(s) in a crash, resulting in serious injury or even death. To help make sure the airbag systems are working properly after a crash, have them inspected and any necessary replacements made as soon as possible.

If an airbag inflates, you will need to replace airbag system parts. See your dealer for service.

If the airbag readiness light stays on after the vehicle is started or comes on when you are driving, the airbag system may not work properly. Have the vehicle serviced right away. See *Airbag Readiness Light* ⇨ *84*.

Child Restraints

Older Children

Older children who have outgrown booster seats should wear the vehicle's seat belts. Refer to *How to Wear Seat Belts Properly* ⇨ *45*.

The manufacturer instructions that come with the booster seat state the weight and height limitations for that booster. Use a booster seat with a lap-shoulder belt until the child passes the fit test below:

- Sit all the way back on the seat. Do the knees bend at the seat edge? If yes, continue. If no, return to the booster seat.
- Buckle the lap-shoulder belt. Does the shoulder belt rest on the shoulder? If yes, continue. If no, return to the booster seat.
- Does the lap belt fit low and snug on the hips, touching the thighs? If yes, continue. If no, return to the booster seat.
- Can proper seat belt fit be maintained for the length of the trip? If yes, continue. If no, return to the booster seat.

Q: What is the proper way to wear seat belts?

A: An older child should wear a lap-shoulder belt and get the additional restraint a shoulder belt can provide. The shoulder belt should not cross the face or neck. The lap belt should fit snugly below the hips, just touching the top of the thighs. This applies belt force to the child's pelvic bones in a crash. It should never be worn over the abdomen, which could cause severe or even fatal internal injuries in a crash.

According to accident statistics, children are safer when properly restrained in a rear seating position.

In a crash, children who are not buckled up can strike other people who are buckled up, or can be thrown out of the vehicle. Older children need to use seat belts properly.

⚠ Warning

Never allow more than one child to wear the same seat belt. The seat belt cannot properly spread the impact forces. In a crash, they can be crushed together and seriously injured. A seat belt must be used by only one person at a time.

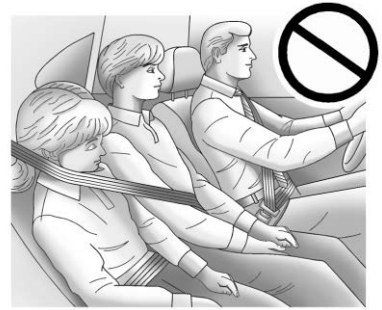

⚠ Warning

Never allow a child to wear the seat belt shoulder belt under both arms or behind their back. A child can be seriously injured by not wearing the lap-shoulder belt properly. In a crash, the child would not be restrained by the shoulder belt. The child could move too far forward increasing the chance of head and neck injury. The child might also slide under the lap belt. The belt force would then be applied right on the abdomen. That could cause serious or fatal injuries. The shoulder belt should go over the shoulder and across the chest.

Infants and Young Children

Everyone in a vehicle needs protection! This includes infants and all other children. Neither the distance traveled nor the age and size of the traveler changes the need, for everyone, to use safety restraints. In fact, the law in every state in the United States and in every Canadian province says children up to some age must be restrained while in a vehicle.

⚠ Warning

Children can be seriously injured or killed if the shoulder belt is worn behind their back, under their legs, or wrapped around their neck. The shoulder belt can tighten but cannot be loosened if it is locked. The shoulder belt locks when it is pulled all the way out of the retractor. It unlocks when the shoulder belt is allowed to go all the way back into the retractor, but it cannot do this if it is wrapped around the child. Never leave children unattended in a vehicle and never allow children to improperly wear, or play with, the seat belts.

Every time infants and young children ride in vehicles, they should have the protection provided by appropriate child restraints. Neither the vehicle's seat belt system nor its airbag system is designed for them.

Children who are not restrained properly can strike other people, or can be thrown out of the vehicle.

⚠ Warning

Never hold an infant or a child while riding in a vehicle. Due to crash forces, an infant or a child will become so heavy it is not possible to hold it during a crash. For example, in a crash at only 40 km/h (25 mph), a 5.5 kg (12 lb) infant will suddenly become a 110 kg (240 lb) force on a person's arms. An infant or child should be secured in an appropriate child restraint.

⚠ Warning

Children who are up against, or very close to, any airbag when it inflates can be seriously injured or killed. Never put a rear-facing child restraint in the front outboard seat. Secure a rear-facing child restraint in a rear seat. It is also better to secure a forward-facing child restraint in a rear seat. If you must secure a forward-facing child restraint in the front outboard seat, always move the front passenger seat as far back as it will go.

Child restraints are devices used to restrain, seat, or position children in the vehicle and are sometimes called child seats or car seats.

There are three basic types of child restraints:

- Forward-facing child restraints
- Rear-facing child restraints
- Belt-positioning booster seats

The proper child restraint for your child depends on their size, weight, and age, and also on whether the child restraint is compatible with the vehicle in which it will be used.

For each type of child restraint, there are many different models available. When purchasing a child restraint, be sure it is designed to be used in a motor vehicle and is designed by a genuine child restraint manufacturer. If it is, the child restraint will have a label saying that it meets federal motor vehicle safety standards.

The instruction manual that is provided with the child restraint states the weight and height limitations for that particular child restraint. In addition, there are many kinds of child restraints available for children with special needs.

⚠ Warning

To reduce the risk of neck and head injury in a crash, infants and toddlers should be secured in a rear-facing child restraint until age two, or until they reach the maximum height and weight limits of their child restraint.

⚠ Warning

A young child's hip bones are still so small that the vehicle seat belt may not remain low on the hip bones, as it should. Instead, it may settle up around the child's abdomen. In a crash, the belt would apply force on a body area that is unprotected by any bony structure. This alone could cause serious or fatal injuries. To reduce the risk of serious or fatal injuries during a crash, young children should always be secured in an appropriate child restraint.

Child Restraint Systems

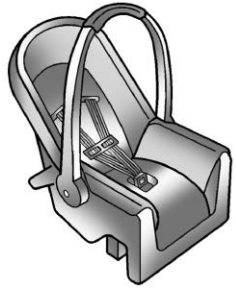

Rear-Facing Infant Restraint

A rear-facing child restraint provides restraint with the seating surface against the back of the infant.

The harness system holds the infant in place and, in a crash, acts to keep the infant positioned in the restraint.

Forward-Facing Child Restraint

A forward-facing child restraint provides restraint for the child's body with the harness.

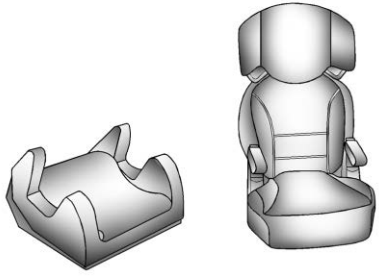

Booster Seats

A belt-positioning booster seat is used for children who have outgrown their forward-facing child restraint. Boosters are designed to improve the fit of the vehicle's seat belt system until the child is large enough for the vehicle seat belts to fit properly without a booster seat. See the seat belt fit test in *Older Children* ⇨ *61*.

Securing an Add-On Child Restraint in the Vehicle

⚠ Warning

A child can be seriously injured or killed in a crash if the child restraint is not properly secured in the vehicle. Secure the child restraint properly in the vehicle using the vehicle seat belt, following the instructions that came with that child restraint and the instructions in this manual.

To help reduce the chance of injury, the child restraint must be secured in the vehicle. Child restraints must be secured in vehicle seats by lap belts or the lap belt portion of a lap-shoulder belt. Never use a seat belt extender when installing a child restraint. Never use non-regulated aftermarket anchors or attachments to secure a child restraint. Children can be endangered in a crash if the child restraint is not properly secured in the vehicle.

When securing an add-on child restraint, refer to the following:

1. Instruction labels provided on the child restraint
2. Instruction manual provided with the child restraint
3. This vehicle owner's manual

The child restraint instructions are important, so if they are not available, obtain a replacement copy from the manufacturer.

Keep in mind that an unsecured child restraint can move around in a collision or sudden stop and injure people in the vehicle. Be sure to properly secure any child restraint in the vehicle — even when no child is in it.

In some areas of the United States and Canada, Certified Child Passenger Safety Technicians (CPSTs) are available to inspect and demonstrate how to correctly use and install child restraints. In the U.S., refer to the National Highway Traffic Safety Administration (NHTSA) website to locate the nearest child safety seat inspection station. For CPST availability in Canada, check with Transport Canada or the Provincial Ministry of Transportation office.

Securing the Child Within the Child Restraint

⚠ Warning

A child can be seriously injured or killed in a crash if the child is not properly secured in the child restraint. Secure the child properly following the instructions that came with that child restraint.

Lower Anchors and Tethers for Children (LATCH System)

Some child restraints have a LATCH system. As part of the LATCH system, your child restraint may have lower attachments and/or a top tether. The LATCH system can help hold the child restraint in place during driving or in a crash. Some vehicles have lower and/or top tether anchors designed to secure a child restraint with lower attachments and/or a top tether.

Some child restraints with a top tether are designed to be used whether the top tether is anchored or not. Other child restraints require that the top tether be anchored. A national or local law may require that the top tether be anchored.

In Canada, the law requires that forward-facing child restraints have a top tether, and that the tether be attached.

Your vehicle does not have lower anchors or top tether anchors to secure a child restraint with the LATCH system. If a national or local law requires that your top tether be anchored, do not use a child restraint in this vehicle because a top tether cannot be properly anchored. You must use the seat belts to secure your child restraint in this vehicle, unless a national or local law requires that the top tether be anchored. Refer to the child restraint instructions and instructions in this manual for securing a child restraint using the vehicle's seat belts. See *Securing Child Restraints* ⇨ *66*.

Securing Child Restraints

This vehicle has airbags. In addition, the vehicle has a passenger sensing system which is designed to turn off the front outboard passenger frontal airbag under certain conditions. See *Passenger Sensing System* ⇨ *56* and *Passenger Airbag Status Indicator* ⇨ *85* for more information, including important safety information.

Never put a rear-facing child seat in the front. This is because the risk to the rear-facing child is so great if the airbag deploys.

⚠ Warning

A child in a rear-facing child restraint can be seriously injured or killed if the front outboard passenger frontal airbag inflates. This is because the back of the rear-facing child restraint would be very close to the inflating airbag. A child in a forward-facing child restraint can be seriously injured or killed if the front outboard passenger frontal airbag inflates and the passenger seat is in a forward position.

Even if the passenger sensing system has turned off the front outboard passenger frontal airbag, no system is fail-safe. No one can guarantee that an airbag will not deploy under some unusual circumstance, even though it is turned off.

Secure rear-facing child restraints in a rear seat, even if the airbag is off. If you secure a forward-facing child restraint in the front outboard passenger seat,

(Continued)

Warning (Continued)

always move the seat as far back as it will go. It is better to secure the child restraint in a rear seat.

See *Passenger Sensing System* ⇨ *56* for additional information.

Rear-facing child restraints should not be installed in the vehicle, even if the airbag is off.

Do not secure a child seat in a position without a top tether anchor if a national or local law requires that the top tether be anchored, or if the instructions that come with the child restraint say that the top tether must be anchored.

In Canada, the law requires that forward-facing child restraints have a top tether, and that the tether be attached.

When using the lap-shoulder belt to secure the child restraint in this position, follow the instructions that came with the child restraint and the following instructions:

1. Move the seat as far back as it will go before securing the forward-facing child restraint. Move the seat upward or the seatback to an upright position, if needed, to get a tight installation of the child restraint. There must be finger clearance between the push button and the child restraint.

   When the passenger sensing system has turned off the front outboard passenger frontal airbag, the OFF indicator on the passenger airbag status indicator should light and stay lit when you start the vehicle. See *Passenger Airbag Status Indicator* ⇨ *85*.

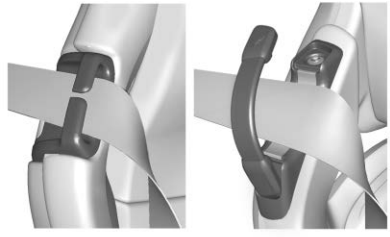

2. Be sure that the shoulder belt is routed through the seat belt guide. See *Lap-Shoulder Belt* ⇨ *47* for proper belt routing.
3. Put the child restraint on the seat.
4. Pick up the latch plate and run the lap and shoulder portions of the vehicle seat belt through or around the restraint. Ensure the seat belt webbing is routed as direct as possible and is not caught on seat handles or plastic trim. The child restraint instructions will show you how.

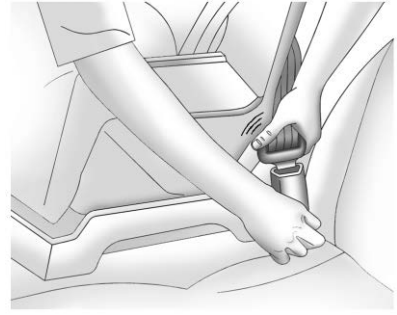

5. Push the latch plate into the buckle until it clicks.

   Position the release button on the buckle, away from the child restraint, so that the seat belt could be quickly unbuckled if necessary.

6. Pull the shoulder belt all the way out of the retractor to set the lock. When the retractor lock is set, the belt can be tightened but not pulled out of the retractor.

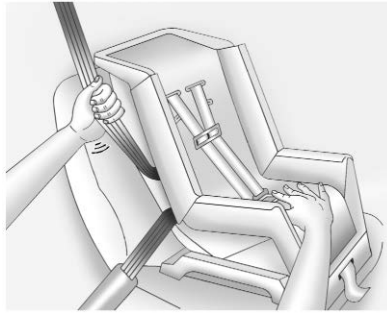

7. To tighten the belt, push down on the child restraint, pull the shoulder portion of the belt to tighten the lap portion of the belt, and feed the shoulder belt back into the retractor.

   There must be finger clearance between the push button and the child restraint. If there is not clearance between the buckle push button and the child restraint, move the seat upward and repeat prior installation steps. Otherwise secure the child restraint in a rear seat.

   When installing a forward-facing child restraint, it may be helpful to use your knee to push down on the child restraint as you tighten the belt.

   Try to pull the belt out of the retractor to make sure the retractor is locked. If the retractor is not locked, repeat Steps 6 and 7.

8. Before placing a child in the child restraint, make sure it is securely held in place. To check, grasp the child restraint at the seat belt path and attempt to move it side to side and back and forth. When the child restraint is properly installed, there should be no more than 2.5 cm (1 in) of movement.

If the airbag is off, the OFF indicator in the passenger airbag status indicator will come on and stay on when the vehicle is started.

If a child restraint has been installed and the ON indicator is lit, see “If the On Indicator Is Lit for a Child Restraint ” under *Passenger Sensing System* ⇨ *56*.

To remove the child restraint, unbuckle the vehicle seat belt and let it return to the stowed position.

Storage

Storage Compartments
Storage Compartments 69
Glove Box 69
Cupholders 69
Underhood Storage 70
Rear Storage 70
Center Console Storage 71

Additional Storage Features
Cargo Tie-Downs 71
Convenience Net 71

Storage Compartments

⚠ Warning

Do not store heavy or sharp objects in storage compartments. In a crash, these objects may cause the cover to open and could result in injury.

Glove Box

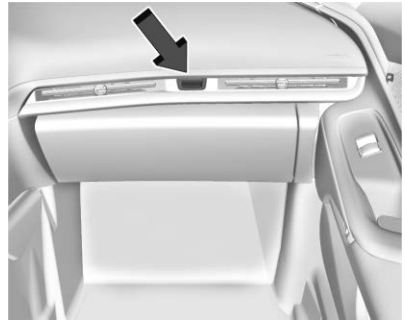

Press the button to open.

The glove box locks when the car alarm is armed. See *Vehicle Alarm System* ⇨ *21*.

The glove box locks when Valet Mode is enabled. See Vehicle > Valet Mode under *Settings* ⇨ *150*.

Cupholders

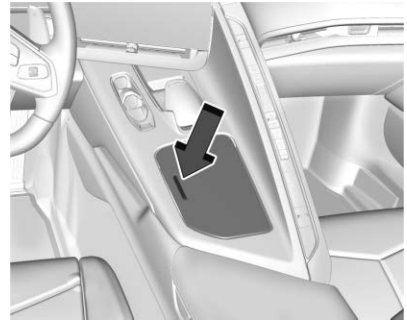

Press the top of the cover to access the cupholders.

Underhood Storage

There is storage in the front, under the hood. To access the front storage, open the hood. See *Hood* ⇨ *17*.

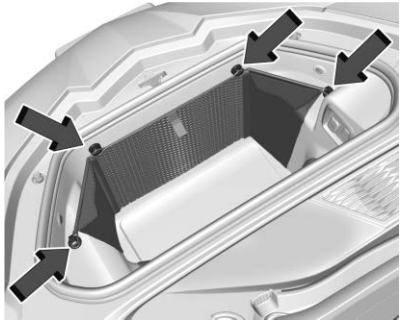

If equipped, the vehicle has a convenience net to be used for small loads. Attach the net to the hooks of the storage area. The net should not be used to store heavy loads.

Rear Storage

Caution
Do not store sharp objects in the corners of the rear storage compartments in the trunk/hatch area. Trunk carpet and components behind the carpet could be damaged.

If equipped, the vehicle has a convenience net to be used for small loads. Attach the net to the hooks of the storage area. The net should not be used to store heavy loads.

Rear Center Storage

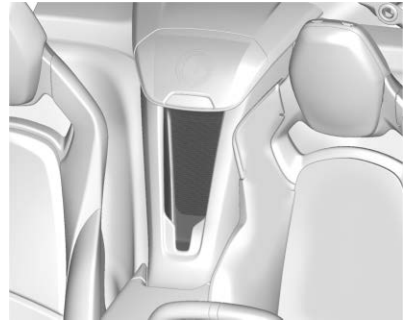

There is storage in the center behind the two front seats.

If equipped, there is a wireless smartphone charger in the pocket.

Center Console Storage

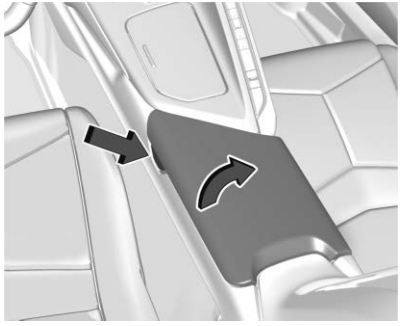

To open, press the button on the driver side.

Depending on the options, there may be two USB ports and an auxiliary port inside.

The center console locks when the car alarm is armed. See *Vehicle Alarm System* ⇨ *21*.

The center console locks when Valet Mode is enabled. See Vehicle > Valet Mode under *Settings* ⇨ *150*.

Additional Storage Features

Cargo Tie-Downs

The cargo tie-downs can be used to secure small loads under the convenience net inside the trunk.

Convenience Net

If equipped, the vehicle has two convenience nets to be used for small loads. One in the rear trunk area and one in the front storage area. See *Underhood Storage* ⇨ *70*.

Attach the net to the hooks in the storage area. The net should not be used to store heavy loads.

Instruments and Controls

Controls

Steering Wheel Adjustment 73
Heated Steering Wheel 73
Horn 73
Windshield Wiper/Washer 73
Compass 74
Clock 74
Power Outlets 75
Wireless Charging 76

Warning Lights, Gauges, and Indicators

Warning Lights, Gauges, and Indicators 78
Instrument Cluster 79
Speedometer 82
Odometer 82
Trip Odometer 82
Tachometer 82
Fuel Gauge 82
Engine Coolant Temperature Gauge 83
Transmission Temperature Gauge 83
Seat Belt Reminders 84
Airbag Readiness Light 84
Passenger Airbag Status Indicator 85
Charging System Light 85
Malfunction Indicator Lamp (Check Engine Light) 86
Front Lift System Light 87
Brake System Warning Light 87
Electric Parking Brake Light 88
Service Electric Parking Brake Light 88
Antilock Brake System (ABS) Warning Light 88
Performance Transmission Active 89
Traction Off Light 89
Traction Control System (TCS)/Electronic Stability Control Light 89
Electronic Stability Control (ESC) Off Light 90
Driver Mode Control Light 90
Tire Pressure Light 91
Engine Oil Pressure Light 91
Security Light 91
High-Beam On Light 92
Lamps On Reminder 92
Cruise Control Light 92
Door Ajar Light 92

Information Displays

Driver Information Center (DIC) 92
Head-Up Display (HUD) 95

Vehicle Messages

Vehicle Messages 98
Engine Power Messages 98
Vehicle Speed Messages 99

Universal Remote System

Universal Remote System 99
Universal Remote System Programming 99
Universal Remote System Operation ... 101

Controls

Steering Wheel Adjustment

Press the control to move the tilt and telescoping steering wheel up and down or forward and rearward.

Both the tilt and telescoping steering column positions can be stored with your memory settings, if equipped. See *Memory Seats* ⇨ *40*.

Do not adjust the steering wheel while driving.

Heated Steering Wheel

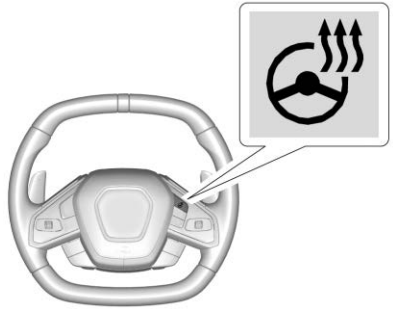

: If equipped, press to turn the heated steering wheel on or off. A light next to the button displays when the feature is turned on.

The steering wheel takes about three minutes to be fully heated.

If equipped with remote start heated seat, the heated steering wheel will follow heated seats in remote start.

Horn

Press on the steering wheel pad to sound the horn.

Windshield Wiper/Washer

The windshield wiper/washer lever is on the right side of the steering column.

With the ignition on or in accessory mode, move the windshield wiper lever to select the wiper speed.

HI : Use for fast wipes.

LO : Use for slow wipes.

INT : Move the lever up to INT for intermittent wipes, then turn the band up for more frequent wipes or down for less frequent wipes.

OFF : Use to turn the wipers off.

1X : For a single wipe, briefly move the wiper lever down. For several wipes, hold the wiper lever down.

: Pull the windshield wiper lever toward you to spray washer fluid and activate the wipers. The wipers will continue until the lever is released or the maximum wash time is reached. When the lever is released, additional wipes may occur depending on how long the windshield washer had been activated. See *Washer Fluid* ⇨ *256* for information on filling the windshield washer fluid reservoir.

Clear snow and ice from the wiper blades and windshield before using them. If frozen to the windshield, carefully loosen or thaw them. Damaged blades should be replaced. See *Wiper Blade Replacement* ⇨ *262*.

Heavy snow or ice can overload the wiper motor.

⚠ Warning

In freezing weather, do not use the washer until the windshield is warmed. Otherwise the washer fluid can form ice on the windshield, blocking your vision.

⚠ Warning

Before driving the vehicle, always clear snow and ice from the hood, windshield, washer nozzles, roof, and rear of the vehicle, including all lamps and windows. Reduced visibility from snow and ice buildup could lead to a crash.

Wiper Parking

If the ignition is turned off while the wipers are on LO, HI, or INT, they will immediately stop.

If the windshield wiper lever is then moved to OFF before the driver door is opened or within 10 minutes, the wipers will restart and move to the base of the windshield.

If the ignition is turned off while the wipers are performing wipes due to windshield washing, the wipers continue to run until they reach the base of the windshield.

Compass

The vehicle may have a compass display on the center stack. The compass receives its heading and other information from the Global Positioning System (GPS) antenna, Electronic Stability Control, and vehicle speed information.

The compass system is designed to operate for a certain number of miles or degrees of turn before needing a signal from the GPS satellites. When the compass display shows CAL, drive the vehicle for a short distance in an open area where it can receive a GPS signal. The compass system will automatically determine when a GPS signal is restored and provide a heading again.

Clock

Set the time and date using the infotainment system. See "Time/Date" under *Settings* ⇨ *150*.

Power Outlets

There are two accessory power outlets:

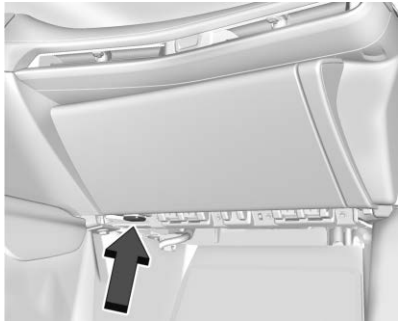

Interior Power Outlet

Underhood Power Outlet

The outlet under the glove box can be used to plug in electrical equipment, such as a cell phone.

Lift the cover to access and replace when not in use.

The power outlet under the glove box is powered when the ignition is on or in accessory mode, or until the driver door is opened within 10 minutes of turning off the vehicle. See *Retained Accessory Power (RAP)* ⇨ *192*.

The underhood outlet is powered at all times. The vehicle battery may run down if the power outlet is used while the ignition is off. Use this power outlet for plugging in the battery maintainer, if equipped.

⚠ Warning

Power is always supplied to the underhood outlet. Do not leave electrical equipment plugged in when the vehicle is not in use because the vehicle could catch fire and cause injury or death.

Caution

Leaving electrical equipment plugged in for an extended period of time while the vehicle is off will drain the battery. Always unplug electrical equipment when not in use and do not plug in equipment that exceeds the maximum 20 amp rating.

Certain electrical accessories may not be compatible with the accessory power outlet and could overload vehicle or adapter fuses. If a problem is experienced, see your dealer.

When adding electrical equipment, be sure to follow the proper installation instructions included with the equipment. See *Add-On Electrical Equipment* ⇨ *230*.

It is recommended that a qualified technician or dealer be seen for the proper installation of your equipment.

Caution

Hanging heavy equipment from the power outlet can cause damage not covered by the vehicle warranty. The power outlets are designed for accessory power plugs only, such as cell phone charge cords.

Wireless Charging

If equipped and enabled, the vehicle has a wireless charging pocket between the driver and passenger seatbacks. The system operates at 145 kHz and wirelessly charges one Qi compatible smartphone. The power output of the system is capable of charging at a rate up to 3 amp (15 W), as requested by the compatible smartphone. See *Radio Frequency Statement* ⇨ *327*.

⚠ Warning

Wireless charging may affect the operation of an implanted pacemaker or other medical devices. If you have one, it is recommended to consult with your doctor before using the wireless charging system.

The vehicle must be on, in accessory mode, or Retained Accessory Power (RAP) must be active. The wireless charging feature may not correctly indicate charging when the vehicle is in RAP, during a Bluetooth phone call, or when phone projection (e.g. Apple CarPlay / Android Auto) is active. See *Retained Accessory Power (RAP)* ⇨ *192*.

The operating temperature is −40 °C (−40 °F) to 85 °C (185 °F) for the charging system and 0 °C (32 °F) to 35 °C (95 °F) for the phone. A charging stopped alert may be displayed on the infotainment screen, if the wireless charger or smartphone are outside of normal operating temperature. Charging will automatically resume when a normal operating temperature is reached.

⚠ Warning

Remove all objects from the charger before charging your compatible smartphone. Objects, such as coins, keys, rings, paper clips, or cards, between the smartphone and charger may become very hot.

On the rare occasion that the charging system does not detect an object, and the object gets wedged between the smartphone and charger, remove the smartphone and allow the object to cool before removing it from the charger, to prevent burns.

To charge a compatible smartphone:

1. Confirm the smartphone is capable of wireless charging.
2. Remove all objects from the charging pocket. The system may not charge if there are any objects between the smartphone and charger.
3. Place the smartphone face up against the rear of the charger.

   To maximize the charge rate, ensure the smartphone is fully seated and centered in the holder with nothing under it.

   A thick smartphone case may prevent the charger from working, or reduce the charging performance. See your dealer for additional information.
4. A green ⚡ will appear on the infotainment display, next to the phone icon. This indicates that the smartphone is detected.
5. If a smartphone is placed on the charger and ⚡ turns off or turns yellow, remove the smartphone and any objects from the pocket. Turn the smartphone 180 degrees and wait a few seconds before placing/aligning it on the pocket again.
6. If a smartphone is placed on the charger and ⚡ turns red, the charger and/or the smartphone is overheated. Remove the smartphone and any objects from the charger in order to cool the system.

The smartphone may become warm during charging. This is normal. In warmer temperatures, the speed of charging may be reduced.

For vehicles with wireless phone projection, the smartphone may overheat during wireless charging. The smartphone may slow down, stop charging, or shut down to protect the battery. The phone may need to be removed from its case to prevent overheating. The ⚡ may flash while the phone is cooling down enough for wireless charging to automatically resume. This is normal. Individual phone performance may vary.

Software Acknowledgements

Certain Wireless Charging Module product from LG Electronics, Inc. ("LGE") contains the open source software detailed below. Refer to the indicated open source licenses (as are included following this notice) for the terms and conditions of their use.

OSS Notice Information

To obtain the source code that is contained in this product, please visit https://opensource.lge.com. In addition to the source code, all referred license terms, warranty disclaimers and copyright notices are available for download. LG Electronics will also provide open source code to you on CD-ROM for a charge covering the cost of performing such distribution (such as the cost of media, shipping, and handling) upon email request to opensource@lge.com. This offer is valid for three (3) years from the date on which you purchased the product.

Freescale-WCT library

Copyright (c) 2012-2014 Freescale Semiconductor, Inc. All rights reserved.

Redistribution and use in source and binary forms, with or without modification, are permitted provided that the following conditions are met:

1. Redistributions of source code must retain the above copyright notice, this list of conditions and the following disclaimer.
2. Redistributions in binary form must reproduce the above copyright notice, this list of conditions and the following disclaimer in the documentation and/or other materials provided with the distribution.
3. Neither the name of the copyright holder nor the names of its contributors may be used to endorse or promote products derived from this software without specific prior written permission.

THIS SOFTWARE IS PROVIDED BY THE COPYRIGHT HOLDERS AND CONTRIBUTORS "AS IS" AND ANY EXPRESS OR IMPLIED WARRANTIES, INCLUDING, BUT NOT LIMITED TO, THE IMPLIED WARRANTIES OF MERCHANTABILITY AND FITNESS FOR A PARTICULAR PURPOSE ARE DISCLAIMED. IN NO EVENT SHALL THE COPYRIGHT HOLDER OR CONTRIBUTORS BE LIABLE FOR ANY DIRECT, INDIRECT, INCIDENTAL, SPECIAL, EXEMPLARY, OR CONSEQUENTIAL DAMAGES (INCLUDING, BUT NOT LIMITED TO, PROCUREMENT OF SUBSTITUTE GOODS OR SERVICES; LOSS OF USE, DATA, OR PROFITS; OR BUSINESS INTERRUPTION) HOWEVER CAUSED AND ON ANY THEORY OF LIABILITY, WHETHER IN CONTRACT, STRICT LIABILITY, OR TORT (INCLUDING NEGLIGENCE OR OTHERWISE) ARISING IN ANY WAY OUT OF THE USE OF THIS SOFTWARE, EVEN IF ADVISED OF THE POSSIBILITY OF SUCH DAMAGE.

Warning Lights, Gauges, and Indicators

Warning lights and gauges can signal that something is wrong before it becomes serious enough to cause an expensive repair or replacement. Paying attention to the warning lights and gauges could prevent injury.

Some warning lights come on briefly when the engine is started to indicate they are working. When one of the warning lights comes on and stays on while driving, or when one of the gauges shows there may be a problem, check the section that explains what to do. Waiting to do repairs can be costly and even dangerous.

Instrument Cluster

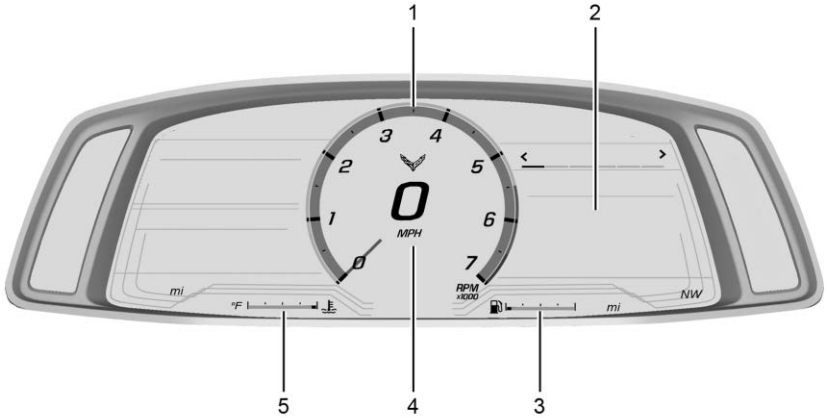

Tour Mode Shown, Other Modes Similar

1. *Tachometer* ⇨ *82*
2. *Driver Information Center (DIC)* ⇨ *92*
3. *Fuel Gauge* ⇨ *82*
4. *Speedometer* ⇨ *82*
5. *Engine Coolant Temperature Gauge* ⇨ *83*

Cluster Menu

There is an interactive display area in the center of the instrument cluster.

Use the right steering wheel control to open and scroll through the different items and displays.

Press < or > to access the cluster applications. Use the thumbwheel to scroll ∧ or ∨ through the list of available features. Press the thumbwheel to select. Not all applications will be available on all vehicles.

- Info Pages: The selected Driver Information Center (DIC) displays can be viewed. See *Driver Information Center (DIC)* ⇨ *92*.
- Performance
- Audio
- Options
- Simplify

Performance

Press the thumbwheel to enter the Performance menu. Scroll through the available items.

G-force : Gives the driver an indication of the vehicle performance in cornering. The G-force gauge will show as an info tile on the left side of the cluster, if selected.

Friction Bubble : A four quadrant visual display, indicative of the four corners of the car, with a “bubble” showing where the most inertia is being exerted on the vehicle.

Launch Control : If equipped, the Launch Control display allows the driver to adjust the parameters of the Launch Control System. See *Track Events and Competitive Driving* ⇨ *172*.

Performance Timer : Press the thumbwheel to enter the setup menu, then select Set Start Speed. Scroll to desired Start Speed, then press the thumbwheel to save it. While on this menu, to change the End Speed, scroll to End Speed and use the thumbwheel to scroll to desired End Speed. Press the thumbwheel to save it. On the next acceleration, the performance timer will record the time. Pressing the thumbwheel while the timer is running will cancel the timer if done before reaching the End Speed.

Lap Timer (without PDR) : Press > when Lap Timer is displayed to start, stop, or reset the lap timer. Press the thumbwheel while the Lap Timer page is active to start the timer. If the lap timer is active, pressing the thumbwheel will stop the current lap timer and start a new lap. Pressing the thumbwheel within 10 seconds after completing the last lap (Stop Lap Timer option is displayed), the Lap Timer will stop.

Lap Timer (with PDR) : The lap times recorded with the PDR system will automatically be displayed in this window. This only happens if a track has been selected in the PDR system and a video recording is started. See *Performance Data Recorder (PDR)* ⇨ *138*.

Oil Temperature : Shows the current oil temperature in either degrees Celsius (°C) or degrees Fahrenheit (°F).

Oil Pressure : Shows the current oil pressure in either kilopascal (kPa) or in pounds per square inch (psi).

Battery Voltage : Shows the current battery voltage.

Transmission Fluid Temperature : Shows the temperature of the transmission fluid in either degrees Celsius (°C) or degrees Fahrenheit (°F).

Tire Status : Shows individual tire pressures and overall temperature as either Cold, Cool, Normal, Warm, or Hot. Normal is typical for normal driving while Warm is typical for aggressive driving. Unknown may be displayed if tire temperature information is unavailable.

eLSD : If equipped, displays the amount of rear differential coupling when the Electronic Limited-Slip Differential (eLSD) is active and functioning during vehicle operation.
A reading of 1% is an open differential and 100% is locked. It is normal for the value to make small or large changes due to driving conditions and driver inputs. See *Limited-Slip Differential (Stingray Models Without Z51 Performance Package)* ⇨ *218* or *Limited-Slip Differential (Stingray With Z51 Performance Package and Z06 model)* ⇨ *219*.

Front Lift : During a driver requested Front Lift (if equipped), the driver may "remember" using the <, or dismiss the display by pressing the thumbwheel. When the Front Lift is Raised due to location, the

driver may delete that stored location using the <, or dismiss the display by pressing the thumbwheel.

See *Front Lift System* ⇨ *214*.

Audio

Use the thumbwheel to scroll through audio presets.

Options

Use the thumbwheel to scroll through items in the Options menu.

Units

Press the thumbwheel while Units is displayed to enter the Units menu. Choose US or metric units by pressing the thumbwheel while the desired item is highlighted. A selected mark will be displayed next to the selected item.

Display Themes

Press the thumbwheel to enter the Display menu. There are seven instrument cluster display configurations to choose from. Sport, Tour, Track, Weather, My Mode, Z-Mode, and Stealth. The style of the cluster will change depending on the theme selected. Default is linked to Driver mode. Other display themes can be set

If in Z-Mode or My Mode then those displays plus HUD (if equipped) can be set.

Stealth Mode is enabled when the Instrument Panel Illumination Control is set to the minimum level. See *Instrument Panel Illumination Control* ⇨ *105*.

- Sport/Z-Mode: Displays Coolant Temperature, Fuel Gauge, Compass, Drive Mode Indicator, Odometer, Speed, Tachometer, Electronic Transmission Range, Current Gear, Active Fuel Management (AFM), Peak Performance, Performance Shift Lights, Speed Limit, Info Area, and Interaction Area.
- Tour/Weather/My Mode: Displays Coolant Temperature, Fuel Gauge, Compass, Drive Mode Indicator, Odometer, Speed, Tachometer, Electronic Transmission Range, Current Gear, Active Fuel Management (AFM), Peak Performance, Speed Limit, Info Area, and Interaction Area.
- Track: Displays Coolant Temperature, Fuel Gauge, Performance Traction Management, Drive Mode Indicator, Speed, Tachometer, Electronic Transmission Range, Current Gear, Info Area, and Interactive Area.
- Stealth: Displays Coolant Temperature, Fuel Gauge, and Digital Speed.

Preset info tiles shown on each layout:

Sport : G-Force, Oil Temperature

Track : Oil Pressure, Transmissions Fluid Temperature, Tire Pressure & Tire Temperature, Oil Temperature

Tour : Time & Outside Air Temperature, Oil Pressure

Weather : Time & Outside Air Temperature, Tire Status

Z-Mode : Oil Temperature, G-Force

My Mode : Economy Trend, Oil Pressure

Stealth : None

Head-Up Display (HUD) Rotation

Press the thumbwheel while Adjust Rotation is highlighted to enter Adjust Mode. Scroll to adjust the angle of the HUD display. Press the thumbwheel to confirm and save the setting. This feature may only be available in P (Park).

Speed Warning

The Speed Warning display allows the driver to set a speed that they do not want to exceed. To set the Speed Warning, press the thumbwheel when Speed Warning is displayed, or press the thumbwheel on the main view to set the speed value. Scroll to adjust the value. Press the thumbwheel to set the speed. Once the speed is set, this feature can be turned off by pressing the thumbwheel while viewing this page. If the selected speed limit is exceeded, a pop-up warning is displayed with a chime.

Software Info

Press > while Software Info is highlighted to display open source software information.

Simplify

Press the thumbwheel to enter the Simplify menu. Simplify mode allows certain features of the instrument cluster to be hidden. These features include info tiles and interactive areas.

Scroll to the desired features with the thumbwheel, and press to toggle them on or off.

Using the thumbwheel, except to acknowledge an alert, will exit Simplify mode.

The selected features will stay hidden even after starting and restarting the vehicle, unless Simplify mode is manually canceled.

Speedometer

The speedometer shows the vehicle speed in either kilometers per hour (km/h) or miles per hour (mph).

Odometer

The odometer shows how far the vehicle has been driven, in either kilometers or miles.

Trip Odometer

The trip odometer shows how far the vehicle has been driven since the trip odometer was last reset.

The trip odometer is accessed and reset through the Driver Information Center (DIC). See *Driver Information Center (DIC)* ⇨ *92*.

Tachometer

The tachometer displays the engine speed in revolutions per minute (rpm).

Shift lights will not appear until the engine is warm.

In Track theme, the tachometer can be set to display a traditional tachometer, or a numerical tachometer with shift lights.

Caution
If the engine is operated with the rpm in the warning area at the high end of the tachometer, the vehicle could be damaged, and the damage would not be covered by the vehicle warranty. Do not operate the engine with the rpm in the warning area.

Fuel Gauge

Metric

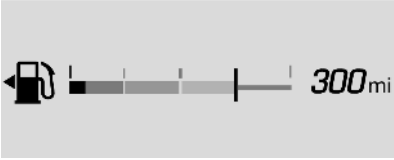

English

When the ignition is on, the fuel gauge indicates about how much fuel is left in the tank.

There is an arrow near the fuel gauge pointing to the side of the vehicle the fuel door is on.

When the indicator nears empty, the low fuel light comes on. There still is a little fuel left, but the vehicle should be refueled soon.

The fuel gauge may:

- Take a little more, or less fuel to fill up than it indicates. For example, the gauge may have indicated the tank is half full, but it actually will take a little more, or less than half the tank's capacity to fill the tank.
- Moves a little while turning a corner, speeding up, or braking.
- Take a few seconds to stabilize after the ignition is turned on and goes back to empty when the ignition is turned off.

These are normal conditions, none of which indicate a problem with the fuel gauge.

Engine Coolant Temperature Gauge

This gauge shows the engine coolant temperature.

If the gauge pointer moves into the red zone, the engine is too hot.

This reading indicates the same thing as the warning light. It means that the engine coolant has overheated. If the vehicle has been operating under normal driving conditions, pull off the road, stop the vehicle, and turn off the engine as soon as possible. See *Engine Overheating* ⇨ *255* for more information.

Transmission Temperature Gauge

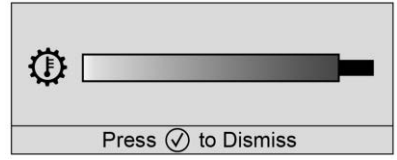

This gauge will display when the transmission is experiencing abnormal temperatures.

As the transmission begins to overheat, the gauge fills to the right.

The Transmission Temperature Gauge monitors all aspects of the transmission. Elevated transmission temperatures may not be reflected in the Transmission Fluid Temperature cluster display gauge.

Messages will display to indicate the severity of the overheating. As the gauge fills up there will be a reduction in vehicle performance. Once full, the transmission is overheated and a message to stop safely will display. Do not drive the vehicle until the message clears. See *Dual Clutch Transmission* ⇨ *195* for more information.

Seat Belt Reminders

Driver Seat Belt Reminder Light

There is a driver seat belt reminder light on the instrument cluster.

When the vehicle is started, this light flashes and a chime may come on to remind the driver to fasten their seat belt.

Then the light stays on solid until the belt is buckled. This cycle may continue several times if the driver remains or becomes unbuckled while the vehicle is moving.

If the driver seat belt is buckled, neither the light nor the chime comes on.

Front Passenger Seat Belt Reminder Light

The vehicle may have a front passenger seat belt reminder light near the passenger airbag status indicator. See *Passenger Sensing System* ⇨ *56*.

When the vehicle is started, this light flashes and a chime may come on to remind passengers to fasten their seat belt.

Then the light stays on solid until the belt is buckled. This cycle continues several times if the front passenger remains or becomes unbuckled while the vehicle is moving.

If the front passenger seat belt is buckled, neither the chime nor the light comes on.

The front passenger seat belt reminder light and chime may come on if an object is put on the seat such as a briefcase, handbag, grocery bag, laptop, or other electronic device. To turn off the reminder light and/or chime, remove the object from the seat or buckle the seat belt.

Airbag Readiness Light

This light shows if there is an electrical problem with the airbag system. It is located in the instrument cluster. The system check includes the airbag sensor(s), the passenger sensing system, the pretensioners, the airbag modules, the wiring, and the crash sensing and diagnostic module. For more information on the airbag system, see *Airbag System* ⇨ *52*.

The airbag readiness light comes on for several seconds when the vehicle is started. If the light does not come on then, have it fixed immediately.

⚠ Warning

If the airbag readiness light stays on after the vehicle is started or comes on while driving, it means the airbag system might not be working properly. The airbags in the vehicle might not inflate in a crash, or they could even inflate without a crash. To help avoid injury, have the vehicle serviced right away.

If there is a problem with the airbag system, a Driver Information Center (DIC) message may also come on.

Passenger Airbag Status Indicator

The vehicle has a passenger sensing system. See *Passenger Sensing System* ⇨ *56* for important safety information. The overhead console has a passenger airbag status indicator.

United States

Canada and Mexico

When the vehicle is started, the passenger airbag status indicator will light ON and OFF, or the symbols for on and off, for several seconds as a system check. Then, after several more seconds, the status indicator will light either ON or OFF, or the on or off symbol, to let you know the status of the front outboard passenger frontal airbag.

If the word ON or the on symbol is lit on the passenger airbag status indicator, it means that the front outboard passenger frontal airbag is allowed to inflate.

If the word OFF or the off symbol is lit on the airbag status indicator, it means that the passenger sensing system has turned off the front outboard passenger frontal airbag.

If, after several seconds, both status indicator lights remain on, if there are no lights at all, or if the airbag readiness light is on, there may be a problem with the lights or the passenger sensing system. See your dealer for service right away.

⚠ Warning

If the airbag readiness light ever comes on and stays on, it means that something may be wrong with the airbag system. To help avoid injury to yourself or others, have the vehicle serviced right

(Continued)

Warning (Continued)

away. See *Airbag Readiness Light* ⇨ *84* for more information, including important safety information.

Charging System Light

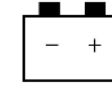

The charging system light comes on briefly when the ignition is turned on, but the engine is not running, as a check to show the light is working. It should go out when the engine is started.

If the light stays on, or comes on while driving, there may be a problem with the electrical charging system. Have it checked by your dealer. Driving while this light is on could drain the battery.

When this light comes on, or is flashing, the Driver Information Center (DIC) also displays a message.

If a short distance must be driven with the light on, be sure to turn off all accessories, such as the radio and air conditioner. Find a safe place to stop the vehicle.

Malfunction Indicator Lamp (Check Engine Light)

This light is part of the vehicle's emission control on-board diagnostic system. If this light is on while the engine is running, a malfunction has been detected and the vehicle may require service. The light should come on to show that it is working when the ignition is in Service Mode. See *Ignition Positions* ⇨ *190*.

Malfunctions are often indicated by the system before any problem is noticeable. Being aware of the light and seeking service promptly when it comes on may prevent damage.

Caution

If the vehicle is driven continually with this light on, the emission control system may not work as well, the fuel economy may be lower, and the vehicle may not run smoothly. This could lead to costly repairs that might not be covered by the vehicle warranty.

Caution

Modifications to the engine, transmission, exhaust, intake, or fuel system, or the use of replacement tires that do not meet the original tire specifications, can cause this light to come on. This could lead to costly repairs not covered by the vehicle warranty. This could also affect the vehicle's ability to pass an Emissions Inspection/Maintenance test. See *Accessories and Modifications* ⇨ *232*.

If the light is flashing : A malfunction has been detected that could damage the emission control system and increase vehicle emissions. Diagnosis and service may be required.

To help prevent damage, reduce vehicle speed and avoid hard accelerations and uphill grades.

If the light continues to flash, find a safe place to park. Turn the vehicle off and wait at least 10 seconds before restarting the engine. If the light is still flashing, follow the previous guidelines and see your dealer for service as soon as possible.

If the light is on steady : A malfunction has been detected. Diagnosis and service may be required.

Check the following:

- If fuel has been added to the vehicle using the capless funnel adapter, make sure that it has been removed. See "Filling the Tank with a Portable Gas Can" under *Filling the Tank* ⇨ *228*. The diagnostic system can detect if the adapter has been left installed in the vehicle, allowing fuel to evaporate into the atmosphere. A few driving trips with the adapter removed may turn off the light.
- Poor fuel quality can cause inefficient engine operation and poor driveability, which may go away once the engine is warmed up. If this occurs, change the fuel

brand. It may require at least one full tank of the proper fuel to turn the light off. See *Recommended Fuel* ⇨ *227*.

If the light remains on, see your dealer.

Emissions Inspection and Maintenance Programs

If the vehicle requires an Emissions Inspection/Maintenance test, the test equipment will likely connect to the vehicle's Data Link Connector (DLC).

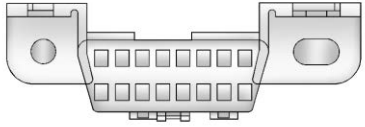

The DLC is under the instrument panel to the left of the steering wheel. Connecting devices that are not used to perform an Emissions Inspection/Maintenance test or to service the vehicle may affect vehicle operation. See *Add-On Electrical Equipment* ⇨ *230*. See your dealer if assistance is needed.

The vehicle may not pass inspection if:

- The light is on when the engine is running.
- The light does not come on when the ignition is in Service Mode.
- Critical emission control systems have not been completely diagnosed. If this happens, the vehicle would not be ready for inspection and may require several days of routine driving before the system is ready for inspection. This can happen if the 12-volt battery has recently been replaced or run down, or if the vehicle has been recently serviced.

See your dealer if the vehicle will not pass or cannot be made ready for the test.

Front Lift System Light

If equipped, this light will flash to indicate when the front of the vehicle is being raised or lowered. An up or down arrow in the light will display, depending on the direction of movement. The light will stay lit while the front is fully raised.

Brake System Warning Light

BRAKE

Metric **English**

This light comes on briefly when the vehicle is turned on to show that the light is working. If it does not come on then, have it fixed so it will be ready to warn you if there is a problem.

If the light comes on and stays on, there is a brake problem. Have the brake system inspected right away. This light may come on if the brake fluid is low. See *Brake Fluid* ⇨ *260*.

If the light comes on while driving, pull off the road and stop carefully. If equipped with electric brake boost, vehicle speed may be limited when the brake system warning light comes on. The brake pedal might be harder to push, or the brake pedal may go closer to the floor. It could take longer to stop. If the light is still on, have the vehicle towed for service. See *Transporting a Disabled Vehicle* ⇨ *293*.

⚠ Warning

The brake system might not be working properly if the brake system warning light is on. Driving with the brake system warning light on can lead to a crash.
If the light is still on after the vehicle has been pulled off the road and carefully stopped, have the vehicle towed for service.

Electric Parking Brake Light

PARK

Metric **English**

This light comes on when the parking brake is applied. If the light continues flashing after the parking brake is released, or while driving, there is a problem with the Electric Parking Brake system. A message may also display in the Driver Information Center (DIC).

If the light does not come on, or remains flashing, see your dealer.

Service Electric Parking Brake Light

This light should come on briefly when the vehicle is turned on. If it does not come on, have it fixed so it will be ready to warn if there is a problem.

If this light stays on or comes on while driving, there is a problem with the Electric Parking Brake (EPB). Take the vehicle to a dealer as soon as possible. In addition to the parking brake, other safety functions that utilize the EPB may also be degraded.
A message may also display in the Driver Information Center (DIC). See *Electric Parking Brake* ⇨ *204*.

Antilock Brake System (ABS) Warning Light

This light comes on briefly when the vehicle is turned on to show that the light is working. If it does not come on then, have it fixed so it will be ready to warn you if there is a problem.

If the ABS warning light stays on, or comes on again while driving, the vehicle needs service. A chime may also sound when the light stays on.

If the ABS warning light is the only light on, the vehicle has regular brakes, but ABS is not functioning.

If both the ABS warning light and the brake system warning light are on, ABS is not functioning and there is a problem with the regular brakes. See your dealer for service.

See *Brake System Warning Light* ⇨ *87*.

Performance Transmission Active

This light turns green when:

- The vehicle is being driven in a spirited manner and transmission shift points have been altered to enhance the vehicle behavior. See “Transmission Shift Operation” under *Driver Mode Control* ⇨ *208*.
  - For track driving events that require standing starts, Performance Transmission behavior can be activated near a standstill by selecting Track Mode > Performance Traction Management (PTM) > Race 1 or Race 2. You can also engage PTM using Z mode, if PTM has been configured to Race 1 or Race 2. See “Performance Traction Management (PTM)” under *Driver Mode Control* ⇨ *208*.
- Manual Launch has been enabled. See “Manual Launch” under *Manual Mode* ⇨ *198*.

Traction Off Light

This light comes on briefly when the vehicle is turned on to show that the light is working. If it does not come on then, have it fixed so it will be ready to warn you if there is a problem.

The traction off light comes on when the Traction Control System (TCS) has been turned off. If Electronic Stability Control (ESC) is turned off, TCS is also turned off. To turn TCS and ESC off and on, see *Traction Control/Electronic Stability Control* ⇨ *206*.

If TCS is off, wheel slip during acceleration is not limited unless necessary to help protect the driveline from damage. Adjust driving accordingly.

Traction Control System (TCS)/ Electronic Stability Control Light

This light comes on briefly when the vehicle is turned on to show that the light is working. If it does not come on then, have it fixed so it will be ready to warn you if there is a problem.

If the light is on and not flashing, the TCS and potentially the ESC system are not fully operational and may not assist in maintaining control. Adjust driving accordingly. If the condition persists, see your dealer as soon as possible. A Driver Information Center (DIC) message may display.

The light flashes when the TCS and/or the ESC system is actively working.

See *Traction Control/Electronic Stability Control* ⇨ *206*.

Electronic Stability Control (ESC) Off Light

This light comes on briefly when the vehicle is turned on to show that the light is working. If it does not come on then, have it fixed so it will be ready to warn you if there is a problem.

This light comes on when the Electronic Stability Control (ESC) system is turned off. If ESC is off, the Traction Control System (TCS) is also off. To turn ESC off and on, see *Traction Control/Electronic Stability Control* ⇨ *206*.

If ESC and TCS are off, the systems do not assist in controlling the vehicle. Adjust driving accordingly.

Driver Mode Control Light

This light comes on when Tour Mode is selected.

This light comes on when Sport Mode is selected.

This light comes on when Track Mode is selected.

This light comes on when Weather Mode is selected.

This light comes on when Z Mode is selected.

This light comes on when My Mode is selected.

See *Driver Mode Control* ⇨ *208*.

Tire Pressure Light

If equipped with the Tire Pressure Monitor System (TPMS), this light comes on briefly when the vehicle is started. It provides information about tire pressures and the TPMS.

When the Light Is On Steady

This indicates that one or more of the tires are significantly underinflated.

A Driver Information Center (DIC) tire pressure message may also display. Stop as soon as possible, and inflate the tires to the pressure value shown on the Tire and Loading Information label. See *Tire Pressure* ⇨ *278*.

When the Light Flashes First and Then Is On Steady

If the light flashes for about a minute and then stays on, there may be a problem with the TPMS. If the problem is not corrected, the light will come on every time the vehicle is started. See *Tire Pressure Monitor Operation* ⇨ *281*.

Engine Oil Pressure Light

Caution

Driving the vehicle with low engine oil pressure can damage the engine and the repairs would not be covered by the vehicle warranty.

If the engine oil pressure light comes on while driving:

1. Stop in a safe location and turn off the engine.
2. Check the oil level. See *Engine Oil (5.5L LT6 Engine)* ⇨ *242* or *Engine Oil (6.2L LT2 Engine)* ⇨ *245*.
3. Add oil if the oil level is below the normal operating range.
4. Restart the vehicle. If the engine oil pressure light stays on for more than 10 seconds, turn the vehicle back off. Do not restart the vehicle. See your dealer for service.

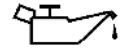

This light should come on briefly when the engine starts. When the engine is off and the vehicle is on, the light should remain illuminated. If it does not come on under either condition, contact your dealer.

If the light comes on and stays on when the engine is running, it may not have adequate oil pressure. The oil level may be low or there may be some other oil system problem. Turn the engine off when it is safe to do so and contact your dealer.

Security Light

The security light should come on briefly as the engine is started. If it does not come on, have the vehicle serviced by your dealer. If the system is working normally, the indicator light turns off.

If the light stays on and the engine does not start, there could be a problem with the theft-deterrent system. See *Immobilizer Operation* ⇨ *23*.

High-Beam On Light

This light comes on when the high-beam headlamps are in use.

See *Headlamp High/Low-Beam Changer* ⇨ *102*.

Lamps On Reminder

This light comes on when the exterior lamps are in use, except when only the Daytime Running Lamps (DRL) are active. See *Exterior Lamp Controls* ⇨ *102*.

Cruise Control Light

For vehicles with cruise control, the cruise control light is white when the cruise control is on and ready, and turns green when the cruise control is set and active.

The light turns off when the cruise control is turned off. See *Cruise Control* ⇨ *219*.

Door Ajar Light

This light comes on when a door is open or not securely latched. Before driving, check that all doors are properly closed.

Information Displays

Driver Information Center (DIC)

The Info application is only available when the ignition is on. The displays show the status of many vehicle systems.

< or > : Press to move left or right between the interactive display zones in the cluster. Press the thumbwheel to select.

∧ or ∨ : Use the thumbwheel to scroll up or down in a list. Press the thumbwheel to select.

DIC Info Pages

The following is the list of all possible DIC info displays. Depending on the vehicle, some may not be available.

Trip 1 or 2/Average Speed/Average Fuel Economy : Trip displays the current distance traveled, in either kilometers (km) or miles (mi), since the trip odometer was last reset. The trip odometer can be reset by pressing and holding the thumbwheel while this display is active.

Average Speed displays the average speed of the vehicle in kilometers per hour (km/h) or miles per hour (mph). This average is calculated based on the various vehicle speeds recorded since the last reset of this value. The average speed can be reset by pressing and holding the thumbwheel while this display is active.

Average Fuel Economy displays the approximate average liters per 100 kilometers (L/100 km) or miles per gallon (mpg). This number is calculated based on the number of L/100 km (mpg) recorded since the last time this menu item was reset. This number reflects only the approximate average fuel economy that the vehicle has right now, and will change as driving conditions change. The Average Fuel Economy can be reset by pressing and holding the thumbwheel while this display is active.

Oil Life : Displays an estimate of the oil's remaining useful life. If REMAINING OIL LIFE 99% is displayed, that means 99% of the current oil life remains.

When the remaining oil life is low, the CHANGE ENGINE OIL SOON message will appear on the display. The oil should be changed as soon as possible. See *Engine Oil (5.5L LT6 Engine)* ⇨ *242* or *Engine Oil (6.2L LT2 Engine)* ⇨ *245*. In addition to the engine oil life system monitoring the oil life, additional maintenance is recommended in the Maintenance Schedule. See *Maintenance Schedule* ⇨ *306*.

The Oil Life display must be reset after each oil change. It will not reset itself. Do not reset the Oil Life display accidentally at any time other than when the oil has just been changed. It cannot be reset accurately until the next oil change. To reset, see *Engine Oil Life System* ⇨ *248*.

Tire Pressure : Displays the approximate pressures of all four tires. Tire pressure is displayed in either kilopascal (kPa) or in pounds per square inch (psi). If the pressure is low, the value for that tire is shown in amber. See *Tire Pressure Monitor System* ⇨ *280* and *Tire Pressure Monitor Operation* ⇨ *281*.

Transmission Fluid Life : Displays an estimate of the fluid's remaining useful life. If REMAINING FLUID LIFE 99% is displayed, that means 99% of the current fluid life remains.

When the remaining fluid life is low, the CHANGE TRANSMISSION FLUID SOON message will appear on the display. The fluid should be changed as soon as possible. See *Dual Clutch Transmission Fluid Life System* ⇨ *249*. In addition to the Transmission Fluid Life system monitoring the fluid life, additional maintenance is recommended in the Maintenance Schedule. See *Maintenance Schedule* ⇨ *306*.

The Fluid Life display must be reset after each fluid change. It will not reset itself. Do not reset the Fluid Life display accidentally at any time other than when the fluid has just been changed. It cannot be reset accurately until the next fluid change. To reset, see *Dual Clutch Transmission Fluid Life System* ⇨ *249*.

Transmission Filter Life : Displays an estimate of the filter's remaining useful life. If REMAINING FILTER LIFE 99% is displayed, that means 99% of the current filter life remains.

When the remaining filter life is low, the REPLACE TRANSMISSION FILTER SOON message will appear on the display. The external canister filter should be replaced as soon as possible. See *Dual Clutch Transmission Fluid Life System* ⇨ *249*. In addition to the Transmission Filter Life system monitoring the filter life, additional maintenance is recommended in the Maintenance Schedule. See *Maintenance Schedule* ⇨ *306*.

The Transmission Filter Life display must be reset after each filter replacement. It will not reset itself. Do not reset the Transmission Filter Life display accidentally at any time other than when the filter has just been replaced. It cannot be reset accurately until the next filter change. To reset, see *Dual Clutch Transmission Fluid Life System* ⇨ *249*.

Fuel Economy : Displays the average fuel economy, the best fuel economy over the selected distance, and a bar graph showing instantaneous fuel economy. Pressing the thumbwheel will open a menu to change the selected distance or reset the current values.

Timer/Fuel Used : This display can be used as a timer. To start/stop the timer, press the thumbwheel while this display is active and then select the start/stop the timer. The display will show the amount of time that has passed since the timer was last reset. To reset the timer to zero, press the thumbwheel to access the menu while this display is active.

Fuel Used displays the approximate liters (L) or gallons (gal) of fuel that have been used since last reset. The fuel used can be reset by pressing the thumbwheel and selecting Reset Fuel Used in the menu.

Economy Trend : Shows the instantaneous fuel economy and current gas mileage.

Speed Limit : Displays sign information, which comes from a roadway database in the on-board navigation.

Engine Hours/Lifetime Revs : Displays the total number of hours the engine has run. It also shows total engine revolutions divided by 10,000.

Head-Up Display (HUD)

⚠ Warning

If the HUD image is too bright, or too high in your field of view, it may take you more time to see things you need to see when it is dark outside. Be sure to keep the HUD image dim and placed low in your field of view.

If equipped with HUD, some information concerning the operation of the vehicle is projected onto the windshield.

The HUD information appears as an image focused out toward the front of the vehicle.

Caution

If you try to use the HUD image as a parking aid, you may misjudge the distance and damage your vehicle. Do not use the HUD image as a parking aid.

The HUD information can be displayed in various languages. The speedometer reading and other numerical values can be displayed in either English or metric units.

The language selection is changed through the radio and the units of measurement are changed through the instrument cluster. See *Settings* ⇨ *150* and "Options" under *Instrument Cluster* ⇨ *79*.

The HUD may display different alerts and information for vehicles equipped with these features:

- Speedometer
- Tachometer
- Manual Paddle Shift Gear Indicator

  These displays on the HUD are for use when using the manual paddle shift controls to shift the transmission. See "Manual Paddle Shift" in *Dual Clutch Transmission* ⇨ *195*.
- G-Force Gauge
- Upcoming Maneuver from On-Board Navigation
- Upcoming Maneuver from OnStar
- Incoming Call

The HUD control is to the left of the steering wheel on the instrument panel.

To adjust the HUD image so that items are properly displayed:

1. Adjust the driver seat.
2. Start the engine.
3. Adjust the following HUD settings as needed.

HUD **:** Press or lift to adjust the vertical position of the HUD image in the windshield.

INFO **:** Press to select the display view. Each press will cause the display view to change to the next view. If vehicle messages are displayed, pressing the DIC select button may clear the message. See *Driver Information Center (DIC)* ⇨ *92*.

±☼ **:** Lift and hold to brighten the display. Press down and hold to dim the display. Hold down to turn the display off.

The HUD image will automatically dim and brighten to compensate for outside lighting. The HUD brightness control can also be adjusted as needed.

The HUD image can temporarily light up depending on the angle and position of the sunlight on the HUD display. This is normal.

Polarized sunglasses could make the HUD image harder to see.

Head-Up Display (HUD) Rotation Option

This feature allows for adjusting the angle of the HUD image.

Use the right steering wheel controls to open and scroll through different items and displays.

The vehicle must be in P (Park).

While in the options menu, press △ or ▽ to scroll to the HUD rotation page. Press the thumbwheel while Head-Up Display Rotation is highlighted to enter Adjust Mode.

Press △ or ▽ to adjust the angle of the HUD display. Press SEL to save the setting. To cancel the setting, press ◁. See *Instrument Cluster* ⇨ *79*.

Display Views

There are several HUD views that can be displayed:

Metric

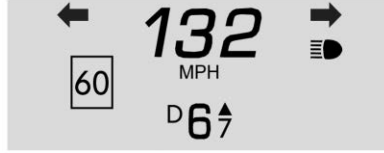

English

Tour : Displays the vehicle speed, gear position, shift indicator, and speed sign.

Tour view is only available in My Mode or Z-Mode. See *Driver Mode Control* ⇨ *208*.

Metric

English

Sport : Displays the vehicle speed, a circular tachometer, gear position, shift indicator, and G-Force meter.

Sport view is only available in My Mode or Z-Mode. See *Driver Mode Control* ⇨ *208*.

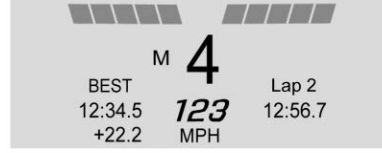

Track : Displays the vehicle speed, gear position, shift lights, and current/best lap times. This includes Gain/Loss of Current Lap compared to Best Lap.

Track view is only available in My Mode or Z-Mode. See *Driver Mode Control* ⇨ *208*.

Interrupts

The interrupt information temporarily displays in any HUD view. Once displayed, HUD returns to the previous HUD view. Interrupts may include:

- Navigation Turn-by-Turn Information
- Incoming Call Information
- Vehicle Alerts
- Audio Selections

Metric

English

Audio : May display when a new source, radio station, or media type is selected.

Navigation : Turn-by-turn navigation information may be displayed when Navigation is active and an upcoming maneuver is pending. It appears until the maneuver is complete and then the HUD display returns to the previous view.

Metric

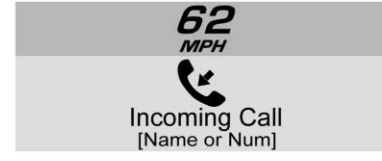

English

Phone : May display when an incoming call is received from either OnStar or a Bluetooth connected phone. It appears momentarily until the call is answered or ignored.

Metric

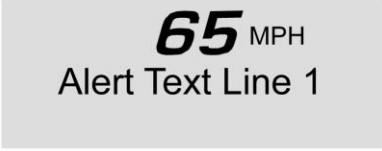

English

Vehicle Alerts : Alerts can be dismissed in the instrument cluster. All alerts are not displayed in the HUD.

Care of the HUD

Clean the inside of the windshield to remove any dirt or film that could reduce the sharpness or clarity of the HUD image.

Clean the HUD lens with a soft cloth sprayed with glass cleaner. Wipe the lens gently, then dry it.

HUD Troubleshooting

Check that:

- Nothing is covering the HUD lens.
- HUD brightness setting is not too dim or too bright.
- HUD is adjusted to the proper height.
- Polarized sunglasses are not worn.
- Windshield and HUD lens are clean.

If the HUD image is not correct, contact your dealer.

The windshield is part of the HUD system. See *Windshield Replacement* ⇨ *263*.

Vehicle Messages

Messages displayed on the DIC indicate the status of the vehicle or some action that may be needed to correct a condition. Multiple messages may appear one after another.

The messages that do not require immediate action can be acknowledged and cleared by pressing ✓. The messages that require immediate action cannot be cleared until that action is performed.

All messages should be taken seriously; clearing the message does not correct the problem.

If a SERVICE message appears, see your dealer.

Follow the instructions given in the messages. The system displays messages regarding the following topics:

- Service Messages
- Fluid Levels
- Vehicle Security
- Brakes
- Steering
- Ride Control Systems
- Driver Assistance Systems
- Cruise Control
- Front Lift System
- Lighting and Bulb Replacement
- Wiper/Washer Systems
- Doors and Windows
- Seat Belts
- Airbag Systems
- Engine and Transmission
- Tire Pressure
- Battery

Engine Power Messages

REDUCED ACCELERATION DRIVE WITH CARE

This message displays when the vehicle's propulsion power is reduced. A reduction in propulsion power can affect the vehicle's ability to accelerate. If this message is on, but there is no observed reduction in performance, proceed to your destination. Under certain conditions the performance may be reduced the next time the vehicle is

driven. The vehicle may be driven while this message is on, but maximum acceleration and speed may be reduced. Anytime this message stays on, or displays repeatedly, the vehicle should be taken to your dealer for service as soon as possible.

Under certain operating conditions, propulsion will be disabled. Try restarting after the ignition has been off for two minutes.

Vehicle Speed Messages

SPEED LIMITED TO XXX KM/H (MPH)

This message shows that the vehicle speed has been limited to the speed displayed. The limited speed is a protection for various propulsion and vehicle systems, such as lubrication, thermal, brakes, suspension, Teen Driver if equipped, or tires.

Universal Remote System

See *Radio Frequency Statement* ⇨ *327*.

The FCC Grant of Equipment Authorization Certificate number is NZLSAHL5B.

The Canadian Registration ID number is 4112A-SAHL5B.

Universal Remote System Programming

If equipped, these buttons are in the sunshade.

This system can replace up to three remote control transmitters used to activate devices such as garage door openers, security systems, and home automation devices. These instructions refer to a garage door opener, but can be used for other devices.

Do not use the Universal Remote system with any garage door opener that does not have the stop and reverse feature. This includes any garage door opener model manufactured before April 1, 1982.

Keep the original hand-held transmitter for use in other vehicles as well as for future programming. Erase the programming when vehicle ownership is terminated. See "Erasing Universal Remote System Buttons" later in this section.

To program a garage door opener, park outside directly in line with and facing the garage door opener receiver. Clear all people and objects near the garage door.

Make sure the hand-held transmitter has a new battery for quick and accurate transmission of the radio-frequency signal.

Programming the Universal Remote System

Programming involves time-sensitive actions and may time out, requiring the procedure to be repeated. Read these instructions completely before programming the Universal Remote system. It may help to have another person assist with the programming process.

1. Hold the end of the hand-held transmitter about 3 to 8 cm (1 to 3 in) away from the Universal Remote system buttons with the indicator light in view.

The hand-held transmitter was supplied by the manufacturer of the garage door opener receiver.

2. Press and release one of the three Universal Remote system buttons to be programmed. Press and hold the hand-held transmitter button. Do not release the hand-held transmitter button until the indicator light changes from a slow to a rapid flash or continuous light. Then release the hand-held transmitter button.

   Some garage door openers may require substitution of Step 2 with the procedure under “Radio Signals for Some Gate Operators” later in this section.

3. Press and hold the newly programmed Universal Remote system button for five seconds while watching the indicator light and garage door activation.
   - If the indicator light stays on continuously or the garage door moves when the button is pressed, then programming is complete. There is no need to complete Steps 4–6.
   - If the indicator light does not come on or the garage door does not move, a second button press may be required. For a second time, press and hold the newly programmed button for five seconds. If the indicator light stays on continuously or the garage door moves when the button is pressed, then programming is complete. There is no need to complete Steps 4–6.
   - If the garage door does not move, continue with programming Steps 4–6.

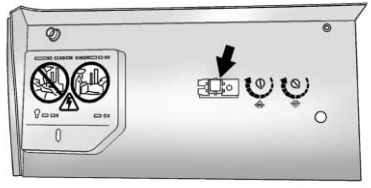

Learn or Smart Button

4. After completing Steps 1–3, locate the Learn or Smart button inside garage on the garage door opener receiver. The name and color of the button may vary by manufacturer.
5. Press and release the Learn or Smart button. Step 6 must be completed within 30 seconds of pressing this button.
6. Return to the vehicle and firmly press and hold the trained Universal Remote system button for two seconds and release. Repeat the “press/hold/release” sequence up to three times to complete the training process.

The Universal Remote system should now activate the garage door. Repeat the process for programming the remaining two buttons.

For questions or programming help, see www.homelink.com/gm or call 1-800-355-3515. For calls placed outside the U.S., Canada, or Puerto Rico, international rates will apply and may differ based on landline or mobile phone.

Radio Signals for Some Gate Operators

Some gate operators and radio-frequency laws require transmitter signals to time out or quit after several seconds of transmission. This may not be long enough for the Universal Remote system to pick up the signal during programming.

If the programming did not work, replace Step 2 under “Programming the Universal Remote System” with the following:

Press and hold the Universal Remote system button while pressing and releasing the hand-held transmitter button every two seconds until the signal has been successfully accepted by the Universal Remote system. The Universal Remote system indicator light will flash slowly at first and then change to a rapid flash or continuous solid-light. Proceed with Step 3 under “Programming the Universal Remote System” to complete.

Universal Remote System Operation

Using the Universal Remote System

Press and hold the appropriate Universal Remote system button for at least one-half second. The indicator light will come on while the signal is being transmitted.

Erasing Universal Remote System Buttons

Erase all programmed buttons when vehicle ownership is terminated.

To erase:

1. Press and hold the two outside buttons until the indicator light begins to flash. This should take about 10 seconds.
2. Release both buttons.

Reprogramming a Single Universal Remote System Button

To reprogram any of the system buttons:

1. Press and hold any one of the buttons. Do not release the button.
2. The indicator light will begin to flash after 20 seconds. Without releasing the button, proceed with Step 1 under “Programming the Universal Remote System.”

Lighting

Exterior Lighting
Exterior Lamp Controls 102
Exterior Lamps Off Reminder 102
Headlamp High/Low-Beam Changer ... 102
Flash-to-Pass 103
Daytime Running Lamps (DRL) 103
Automatic Headlamp System 103
Headlamp Leveling Control 104
Hazard Warning Flashers 104
Turn and Lane-Change Signals 104

Interior Lighting
Instrument Panel Illumination Control 105
Courtesy Lamps 105
Reading Lamps 105
Engine Compartment Lamp 106

Lighting Features
Entry Lighting 106
Exit Lighting 106
Battery Power Protection 106
Exterior Lighting Battery Saver 107

Exterior Lighting

Exterior Lamp Controls

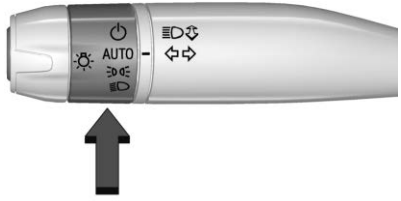

There are four positions:

⏻ **:** Turns the exterior lamps off and deactivates the AUTO mode. Turn to ⏻ again to reactivate the AUTO mode.

For vehicle first sold in Canada, the headlamps will automatically reactivate when the vehicle is shifted out of P (Park).

AUTO : Sets the exterior lamps to automatic mode. AUTO mode turns the exterior lamps on and off depending on how much light is available outside the vehicle.

To override AUTO mode, turn the control to ⏻.

To reset to AUTO mode, turn the control to ⏻ and then release back to AUTO. Automatic mode also resets when the vehicle is turned off and then back on again if the control is left in the AUTO position.

: Turns on the parking lamps including all lamps, except the headlamps.

The parking lamp indicator light comes on and stays on when the parking lamps are on, with the engine off and the vehicle in accessory mode..

: Turns on the headlamps together with the parking lamps and instrument panel lights.

Exterior Lamps Off Reminder

A warning chime will sound if the exterior lamp control is left on in either the headlamp or parking lamp position and the driver door is opened with the ignition off.

Headlamp High/Low-Beam Changer

Push the turn signal lever away from you and release to turn the high beams on. To return to low beams, push the lever again or pull it toward you and release.

This indicator light turns on in the instrument cluster when the high-beam headlamps are on.

Flash-to-Pass

To use the flash-to-pass feature, briefly pull the turn signal lever toward you. The high-beam indicator flashes to indicate to the other driver that you intend to pass.

Daytime Running Lamps (DRL)

DRL can make it easier for others to see the front of your vehicle during the day. DRL are required on all vehicles first sold in Canada.

The DRL system makes the dedicated lamps come on when the following conditions are met:

- The ignition is on.
- The exterior lamp control is in the AUTO.
- The light sensor determines it is daytime.

For vehicles first sold in Canada, the DRL can only be turned off when the vehicle is in P (Park).

When DRL are on, only the front lamps will be on. The parking lamps, taillamps, instrument panel lights, or other exterior lamps will not be on when the DRL are being used.

When it is dark enough outside, the front lamps dim to parking lamps and the normal low-beam headlamps turn on.

The regular headlamp system should be turned on when needed.

To turn off the DRL, turn the exterior lamp control to ⏻. The DRL will stay off until the control is toggled again.

Automatic Headlamp System

When the exterior lamp control is set to AUTO and it is dark enough outside, the headlamps and parking lamps come on automatically.

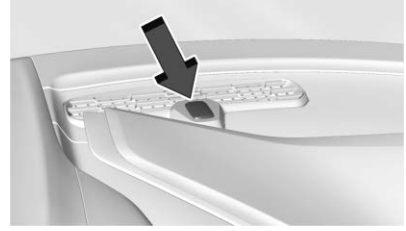

There is a light sensor on top of the instrument panel. Do not cover the sensor, otherwise the headlamps will come on when they are not needed.

The system may also turn on the headlamps and parking lamps when driving through a parking garage or tunnel.

If the vehicle is started in a dark garage, the automatic headlamp system comes on immediately. If it is light outside when the vehicle leaves the garage, there is a slight delay before the automatic headlamp system changes to the Daytime Running Lamps (DRL). During that delay, the instrument cluster may not be as bright as usual. Make sure the instrument panel brightness control is in the full bright position. See *Instrument Panel Illumination Control* ⇨ *105*.

When it is bright enough outside, the headlamps and parking lamps will turn off or may change to DRL.

The automatic headlamp system turns off when the exterior lamp control is turned to ⏻ or the ignition is off.

To turn automatic headlamp system back on, turn the band to ⏻ again, then release it.

If the automatic headlamp system has the headlamps turned on and you turn the ignition off, the headlamps will turn off. When the driver door is opened the headlamps and parking lamps will illuminate for a period of time.

The length of the delayed illumination period can be changed. Touch the Setting icon and select Vehicle > Lighting > Exit Lighting.

The regular headlamp system should be turned on when needed.

Lights On with Wipers

If the windshield wipers are activated in daylight with the engine on and the exterior lamp control is in AUTO, the headlamps, parking lamps, and other exterior lamps will come on. The time it takes for the lamps to turn on depends on the wiper speed. When the wipers are turned off, the lamps turn off. To disable, move the exterior lamp control to ⏻ or ≡DC.

Headlamp Leveling Control

Automatic Headlamp Leveling Control

If equipped, the level of the headlamps is automatically adjusted based on the vehicle load to reduce the glare to other drivers.

Hazard Warning Flashers

The hazard warning flashers warn others that you have a problem. The button is on the overhead console.

⚠ : Press to make the front and rear turn signal lamps flash on and off. Press again to turn the flashers off.

The hazard warning flashers work no matter what mode the ignition is in, even if the ignition is turned off.

When the hazard warning flashers are on, the turn signals will not work.

Turn and Lane-Change Signals

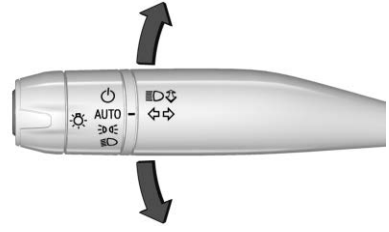

An arrow on the instrument cluster flashes in the direction of the turn or lane change.

Move the lever all the way up or down to signal a turn.

Raise or lower the lever until the arrow starts to flash to signal a lane change. Hold it there until the lane change is complete. If the lever is briefly pressed and released, the turn signal flashes three times. If more flashes are desired, continue to hold the lever.

The lever returns to its starting position when it is released.

If after signaling a turn or lane change the arrows flash rapidly or do not come on, a turn signal indicator light failure may have occurred.

If a turn signal has failed, the lamp may need to be replaced. See your dealer.

Turn Signal on Chime

A chime sounds if the turn signal has been on for more than 1.2 km (0.75 mi) of driving.

If you need to leave the turn signal on for more than 1.2 km (0.75 mi), turn off the signal and then turn it back on.

Interior Lighting

Instrument Panel Illumination Control

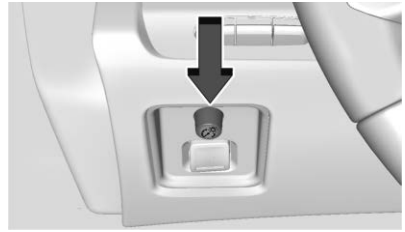

This feature adjusts the brightness of all illuminated controls. The knob for this feature is on the left side of the instrument panel.

Turn the knob clockwise or counterclockwise to brighten or dim the lights.

The knob is functional at night, or when headlamps or the parking lamps are ON.

Night Mode

At night, when the knob is turned all the way to the off position, the instrument cluster will show minimum feature content (digital speed, gear indication, coolant temperature, and the fuel gauge) with muted colors to reduce light emission for better visibility. The Infotainment System display and the interior lighting are off.

Courtesy Lamps

The interior lamps will come on when any door is opened, 🔓 on the remote key is pressed, or when the ignition is switched off.

The hatch/trunk lamps only come on when the rear compartment is opened.

Reading Lamps

If equipped, the reading lamps are in the overhead console. The lamps go on when any door is opened, 🔓 on the remote key is pressed, or when the vehicle is turned off. When the doors are closed, press the lamp buttons to turn on each lamp.

To operate, the vehicle must be on, in accessory mode, or using Retained Accessory Power (RAP).

Engine Compartment Lamp

If equipped, the engine compartment lamp will turn on briefly when:

- 🔓 is pressed on the key.
- Keyless Access is used to unlock the door.
- Any door is opened.
- The engine compartment hatch is opened.

The engine compartment lamp will turn off when:

- All doors and the engine compartment hatch are closed.
- 🔒 is pressed on the key.
- The vehicle begins to move after shifting out of P (Park).
- The vehicle is started, or turned from off to accessory mode.

If any door or the engine compartment hatch/trunk remains open, while the vehicle is off, a timer will turn the lamp off.

Lighting Features

Entry Lighting

The interior lamps turn on when pressing 🔓 on the remote key or opening any doors, and the dome lamp control is in the DOOR position.

Some exterior lamps also turn on when pressing 🔓 on the remote key or opening any doors. Low-beam lamps will only turn on briefly at night, or in areas with limited lighting.

All lamps will gradually fade out after about 30 seconds.

Entry lighting can be disabled manually by closing all doors, pressing 🔒 on the remote key, or starting the vehicle.

This feature can be changed. On the infotainment home screen, select the Settings icon > Vehicle > Vehicle Locator Lights.

Exit Lighting

Some exterior lamps and interior lamps turn on when the driver door is opened after the vehicle is turned off.

The exterior and interior lamps remain on for a set amount of time, then automatically turn off.

The interior lights turn on when the vehicle is turned off.

The exterior lamps turn off immediately by turning the exterior lamp control off.

This feature can be changed. On the infotainment home screen, select the Settings icon > Vehicle > Exit Lighting.

Battery Power Protection

This feature helps prevent the battery from being drained, if the interior courtesy lamps or reading lamps are accidentally left on. If any of these lamps are left on, they automatically turn off after 10 minutes, if the ignition is off. The lamps will not come back on again until one of the following occurs:

- The ignition is turned on.
- The doors are closed and then re-opened.

Exterior Lighting Battery Saver

The exterior lamps turn off about 10 minutes after the vehicle is turned off, if the parking lamps or headlamps have been manually left on. This protects against draining the battery. To restart the 10-minute timer, turn the exterior lamp control to the ⏻ position and then back to the ≡DO≡ or ≡D position.

To keep the lamps on for more than 10 minutes, the vehicle must be on or in accessory mode.

Infotainment System

Introduction
Introduction 108
Overview 109
Steering Wheel Controls 111
Using the System 112
Software Updates 114

Radio
AM-FM Radio 114
HD Radio Technology 116
Radio Data System (RDS) 117
Satellite Radio 117
Radio Reception 117
Diversity Antenna System 118

Audio Players
Avoiding Untrusted Media Devices 118
USB Port 118
Auxiliary Jack 121
Bluetooth Audio 121

Navigation
Using the Navigation System 122
Maps 125
Navigation Symbols 125
Destination 126
Global Positioning System (GPS) 132
Vehicle Positioning 132
Problems with Route Guidance 132
If the System Needs Service 133
Map Data Updates 133
Database Coverage Explanations 133

Voice Recognition
Voice Recognition 133

Performance Data Recorder (PDR)
Performance Data Recorder (PDR) 138

Phone
Bluetooth (Overview) 144
Bluetooth (Pairing and Using a Phone) 144
Apple CarPlay and Android Auto 148

Settings
Settings 150
Teen Driver 153

Trademarks and License Agreements
Trademarks and License Agreements 156

Introduction

Read the following pages to become familiar with the features.

⚠ Warning

Taking your eyes off the road for too long or too often while using any infotainment feature can cause a crash. You or others could be injured or killed. Do not give extended attention to infotainment tasks while driving. Limit your glances at the vehicle displays and focus your attention on driving. Use voice commands whenever possible.

The infotainment system has built-in features intended to help avoid distraction by disabling some features when driving. These features may gray out when they are unavailable. Many infotainment features are also available through the instrument cluster and steering wheel controls.

Before driving:

- Become familiar with the operation, center stack controls, steering wheel controls, and infotainment display.
- Set up the audio by presetting favorite stations, setting the tone, and adjusting the speakers.
- Set up phone numbers in advance so they can be called easily by pressing a single control or by using a single voice command.

See *Distracted Driving* ⇨ *169*.

Active Noise Cancellation (ANC)

If equipped, ANC reduces engine noise in the vehicle's interior. ANC requires the factory-installed audio system, radio, speakers, amplifier (if equipped), induction system, and exhaust system to work properly. Deactivation is required by your dealer if related aftermarket equipment is installed.

Overview

Infotainment System

The infotainment system is controlled by using the infotainment display, controls on the center stack, steering wheel controls, and voice recognition.

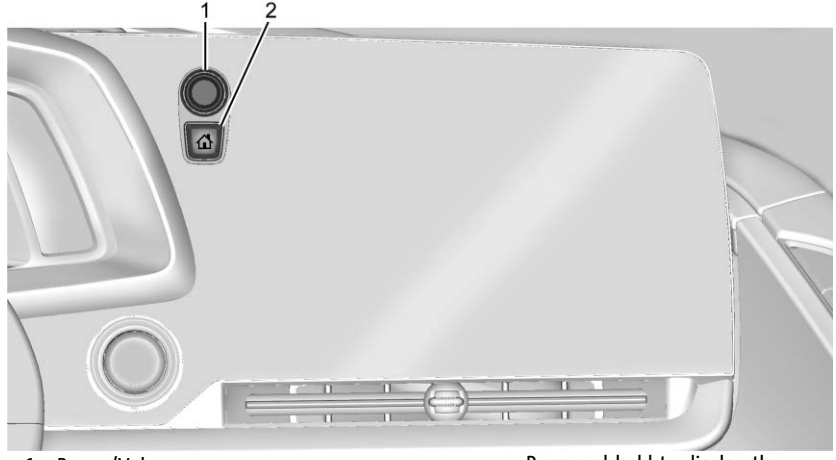

1. Power/Volume
   - When off, press to turn the system on.
   - When on, press to mute the system. Press again to unmute the system.
   - Press and hold to display the power off screen or the option to display the power off screen.
   - Turn to increase or decrease the volume.

2. ⌂ (Home Page)
   - Press to go to the Home Page. See “Home Page” in this section.

     Pressing ⌂ again displays the porch view screen showing audio, phone, and navigation (if equipped) information.
   - Press to exit Android Auto or Apple CarPlay. To enter back into Android Auto or Apple CarPlay, press and hold. See *Apple CarPlay and Android Auto* ⇨ *148*.

Home Page

The Home Page is where vehicle application icons are accessed. Some applications are disabled when the vehicle is moving.

Swipe left or right across the display to access the pages of icons.

At the bottom of the Home page, in the status bar, is the notification icon. This displays the number of notifications. Touching the icon shows the notifications. The notification icon may display for a few seconds and then go away, depending on the number of icons in the status bar.

Managing Home Page Icons

1. Touch and hold any of the Home Page icons to enter edit mode.
2. Continue holding the icon and drag it to the desired position.
3. Release your finger to drop the icon in the desired position.
4. To move an application to another page, drag the icon to the edge of the display toward the desired page.
5. Continue dragging and dropping application icons as desired.

Steering Wheel Controls

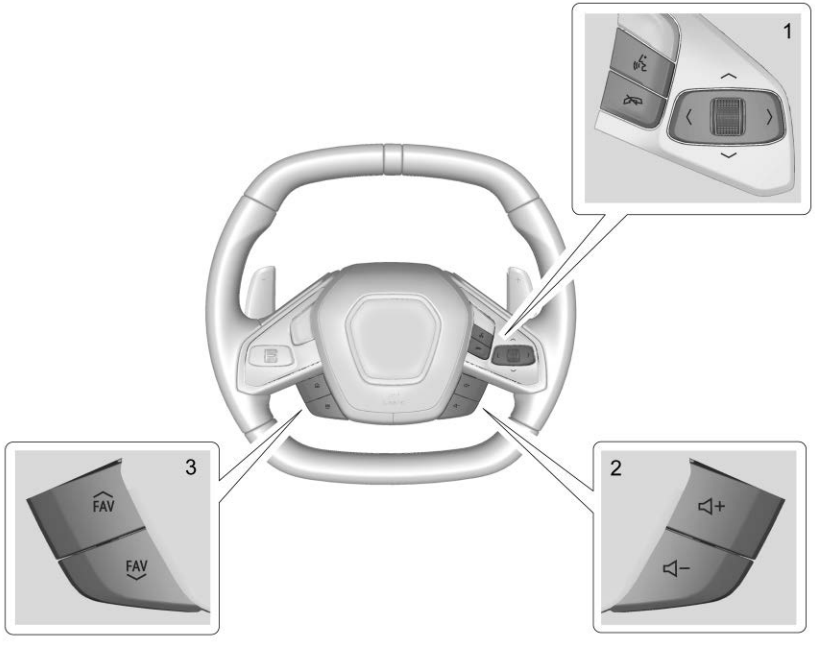

If equipped, some audio controls can be adjusted at the steering wheel.

(1) : Press to answer an incoming call or start voice recognition. See *Bluetooth (Overview)* ⇨ *144* or *Bluetooth (Pairing and Using a Phone)* ⇨ *144*.

(1) : Press to decline an incoming call or end a current call. Press to mute or unmute the infotainment system when not on a call. See *Bluetooth (Overview)* ⇨ *144* or *Bluetooth (Pairing and Using a Phone)* ⇨ *144* or *Voice Recognition* ⇨ *133*.

< or > (1) : Press to move left or right between the interactive display zones in the cluster. Press the thumbwheel to select.

∧ or ∨ (1) : Use the thumbwheel to scroll up or down in a list or seek if the audio page is displayed in the cluster. Press the thumbwheel to select.

+ or – (2) : Pull to increase or decrease volume.

FAV or FAV (3) : Pull to display a list of favorites. Pull again to select the next or previous favorite when listening to the radio.

Using the System

Audio

Touch the Audio icon to display the active audio source page. Examples of available sources may include AM, FM, SXM (if equipped), MyMedia, USB, AUX, and Bluetooth.

Phone

Touch the Phone icon to display the Phone main page. See *Bluetooth (Overview)* ⇨ *144* or *Bluetooth (Pairing and Using a Phone)* ⇨ *144*.

Navigation

Touch the Navigation icon to display the embedded navigation map. See *Using the Navigation System* ⇨ *122*.

Users

If equipped, touch the Users icon to sign in or create a new user profile, and follow the on-screen instructions.

Only four user profiles can be active at one time in the vehicle. It may be necessary to remove a profile from the menu before creating or signing into an existing profile. The removed profile can be logged into at a later time.

Settings

Touch the Settings icon to display the Settings menu. See *Settings* ⇨ *150*.

Apple CarPlay

Touch the Apple CarPlay icon to activate Apple CarPlay (if equipped) after a supported device is connected. See *Apple CarPlay and Android Auto* ⇨ *148*.

Android Auto

Touch the Android Auto icon to activate Android Auto (if equipped) after a supported device is connected. See *Apple CarPlay and Android Auto* ⇨ *148*.

Apps

If equipped, in-vehicle apps are available for download. Touch the Apps icon on the Home Page to begin.

Downloading and using in-vehicle apps requires Internet connectivity which can be accessed with a data plan through the vehicle's built-in 4G LTE Wi-Fi hotspot, if equipped, or a compatible mobile device hotspot. On most mobile devices, activation of the Wi-Fi hotspot is in the device's Settings menu under Mobile Network Sharing, Personal Hotspot, Mobile Hotspot, or similar.

Availability of apps and connectivity varies by vehicle, conditions, and location. Data plan rates apply. Features are subject to change. For more information, see www.my.chevrolet.com/learn.

OnStar Services

If equipped, touch the OnStar Services icon to display the OnStar Services and Account pages. See *OnStar Overview* ⇨ *331*.

Camera

If equipped, touch the Camera icon to access the camera application. See *Assistance Systems for Parking or Backing* ⇨ *223*.

Shortcut Tray

The shortcut tray is near the bottom of the display. It shows up to four applications.

Infotainment Display Features

Infotainment display features show on the display when available. When a feature is unavailable, it may gray out. When a feature is touched, it may highlight.

Infotainment Gestures

Use the following finger gestures to control the infotainment system.

Touch/Tap

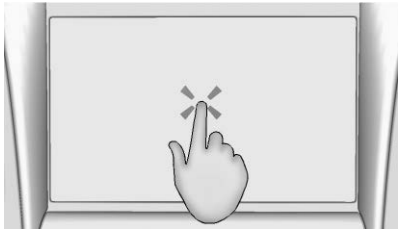

Touch/tap is used to select an icon or option, activate an application, or change the location inside a map.

Touch and Hold

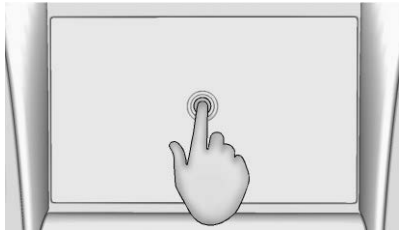

Touch and hold can be used to start another gesture, or to move or delete an application.

Drag

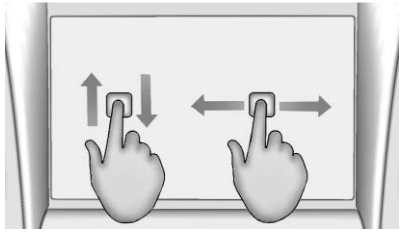

Drag is used to move applications on the Home Page, or to pan the map. To drag the item, it must be held and moved along the display to the new location. This can be done up, down, right, or left. This feature is only available when vehicle is parked and not in motion.

Nudge

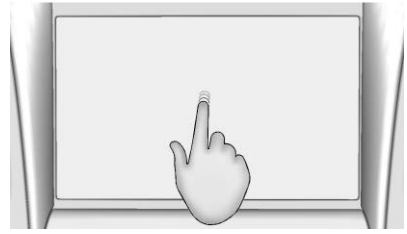

Nudge is used to move items a short distance on a list or a map. To nudge, hold and move the selected item up or down to a new location.

Fling or Swipe

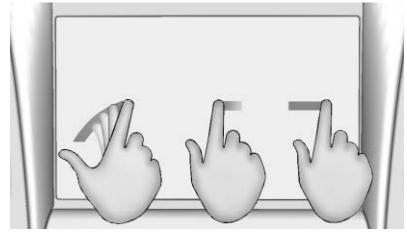

Fling or swipe is used to scroll through a list, pan the map, or change page views. Do this by placing a finger on the display then moving it rapidly up and down or right and left.

Spread

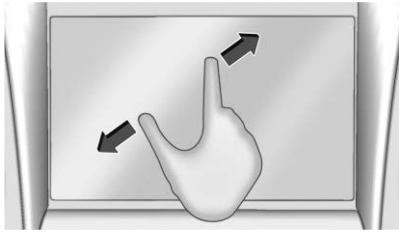

Spread is used to zoom in on a map, certain images, or a web page. Place finger and thumb together on the display, then move them apart.

Pinch

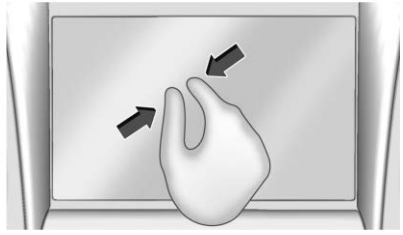

Pinch is used to zoom out on a map, certain images, or a web page. Place finger and thumb apart on the display, then move them together.

Cleaning High Gloss Surfaces and Vehicle Information and Radio Displays

For vehicles with high gloss surfaces or vehicle displays, use a microfiber cloth to wipe surfaces. Before wiping the surface with the microfiber cloth, use a soft bristle brush to remove dirt that could scratch the surface. Then use the microfiber cloth by gently rubbing to clean. Never use window cleaners or solvents. Periodically hand wash the microfiber cloth separately, using mild soap. Do not use bleach or fabric softener. Rinse thoroughly and air dry before next use.

Software Updates

Over-the-Air Software Updates

If equipped, see “Updates” under *Settings* ⇨ *150* for details on software updates.

Radio

AM-FM Radio

Playing the Radio

From the Home Page, touch the Audio icon to display the active audio source page. Choose from the three most recently used sources listed at the left side of the display or touch the More option to display a list of available sources. Examples of available sources may include AM, FM, SXM (if equipped), MyMedia, USB, AUX (if equipped), and Bluetooth.

Infotainment System Sound Menu

From any of the audio source main pages, touch Sound to display the following:

Equalizer : Touch to adjust Bass, Midrange, Treble, and Surround (if equipped) using the options on the infotainment display.

Fade/Balance : Touch to adjust by using the controls on the infotainment display or by tapping/dragging the crosshair.

DSP Modes

- Bose Centerpoint surround sound system has three DSP modes:
  - Normal: Adjusts the audio to provide the best sound for all seating positions.
  - Driver: Adjusts the audio to provide the best sound for the driver.
  - Centerpoint: Turns on Bose Centerpoint surround technology. This setting adjusts the audio to create a surround listening experience for all seating positions.

Finding a Station

Seeking a Station

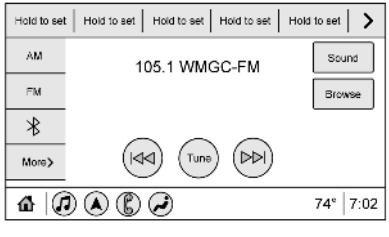

From the AM, FM, or SXM (if equipped) option, press ⏭ or ⏮ on the center stack to search for the previous or next strong station or channel.

Browsing Stations

Touch the Browse option to list all available stations or channels. Navigate up and down through all stations by scrolling the list. Touch the station or channel you want to listen to. Touch ☆ to save the station or channel as a favorite.

If equipped, touch Update Station List to update the active stations in your area.

Direct Tune

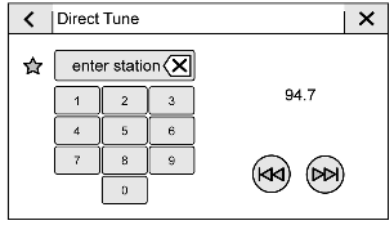

Access Direct Tune by touching the Tune icon on the infotainment display to bring up the keypad. Navigate through all frequencies using the arrows on the right side of the Direct Tune display. Directly enter a station or channel using the keypad. When a new station or channel is entered, the information about that station or channel displays on the right side. This information will update with each new valid frequency. Touch ☆ to save the station or channel as a favorite.

The keypad will gray out entries that do not contribute to a valid frequency and will automatically place a decimal point within the frequency number.

Touch (X) to delete one number at a time. Touch and hold (X) to delete all numbers.

A valid AM or FM station will automatically tune to the new frequency but not close the Direct Tune display. When listening to SXM (if equipped), touch Go after entering the channel. Touch the Back icon on the infotainment display or touch ✕ to exit out of Direct Tune.

The tune arrows on the right side of the Direct Tune display will tune through the complete station or channel list one station step at a time per touch. A touch and hold advances through stations or channels quickly.

If equipped, HD Radio multicast stations cannot be tuned directly through the Direct Tune feature. Only the analog or HD1 station can use that feature. Use the display arrows to adjust to the multicast stations.

AM, FM, and SXM Categories

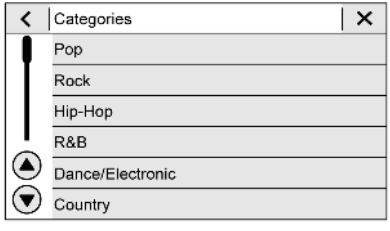

From the AM stations, if equipped with HD Radio, FM, or SXM (if equipped) display, touch Categories at the top of the Browse menu to access the categories list. The list contains names associated with the AM or FM stations, or SXM channels. Touch a category name to display a list of stations or channels for that category. Touching a station or channel from the list will tune the radio to that station or channel.

Storing Radio Station Presets

Favorites show in the area at the top of the display.

AM, FM, SXM (if equipped), and HD Radio Stations (if equipped) : Press and hold a preset to store the current station or channel as a favorite. Touch a saved favorite to recall a favorite station or channel.

Favorites can also be stored by touching ☆ in a station or channel list. This will highlight indicating that it is now saved as a favorite.

The number of favorites displayed is automatically adjusted by default, but can be manually adjusted in Settings in the System tab under Favorites and then Set Number of Audio Favorites. It can also be adjusted in Settings in the Apps tab under Audio and then Set Number of Audio Favorites.

HD Radio Technology

If equipped, HD Radio is a free service with features such as digital quality sound, more stations available on a single frequency such as HD2 and HD3, and display information such as artist and song title.

From the Now Playing display, touch the HD Radio icon to turn HD on or off.

Station Access

To access HD Radio stations:

1. Tune the radio to the station. If HD Radio is turned on and the station is broadcasting in HD Radio, the radio will automatically tune to the HD version of the current channel (HD1) after several seconds. The radio will also display icons representing additional channels (HD2, ...HD8), that may be available. When the radio successfully tunes to a HD station, the HD logo will display and digital audio will play.
2. Touch the display arrows to tune to the previous or next HD Radio station.

There may be a delay before the station starts playing.

The HD Radio station number is indicated next to the HD logo.

HD Radio stations can be saved as favorites.

For a list of all stations, see www.hdradio.com.

HD Radio Troubleshooting

Digital Audio Delay : Wait for the signal to process. This can take several seconds.

Volume Change, Audio Skip, Echo, Digital Audio Lost : Station signal strength may be weak, the station is out of range, or the station may be out of alignment. Verify proper reception on another station.

If the HD Radio signal weakens while listening to HD1, the radio will automatically switch to the analog version of the radio station.

If the HD Radio signal loses reception while listening to stations HD2 to HD8, the radio mutes until the signal can be recovered or until the station is changed.

HD Radio can be disabled if driving in a weak signal area. Touch HD Radio On/Off to toggle HD Radio reception on and off.

Radio Data System (RDS)

If equipped, RDS features are available for use only on FM stations that broadcast RDS information. When supported, the radio may:

- Group stations by Category (i.e., Program Type) such as Rock, Jazz, Classical, etc.
- Display text from radio stations that include station name and messages.

This system relies on receiving specific information from these stations and only works when the information is available. It is possible that a radio station could broadcast incorrect information that causes the radio features to work improperly. If this happens, contact the radio station.

When information is broadcast from a RDS station, the station name or call letters display on the audio screen. Radio text supporting the currently playing broadcast may also appear.

Satellite Radio

SiriusXM Radio Service

If equipped, vehicles with a valid SiriusXM radio subscription can receive SiriusXM programming.

SiriusXM radio has a wide variety of programming and commercial-free music, coast to coast, in digital-quality sound. In the U.S., see www.siriusxm.com or call 1-888-601-6296. In Canada, see www.siriusxm.ca or call 1-877-438-9677.

When SiriusXM is active, the channel name, number, song title, and artist appear on the display.

SiriusXM with 360L

SiriusXM with 360L interface has enhanced in-vehicle listening experience for subscribers. The experience now offers more categories and system learned recommendations toward discovering more personalized content.

To use the full SiriusXM 360L program, including streaming content and listening recommendations, OnStar Connected Access is required. Connected vehicle services vary by model and require a complete working electrical system, cell reception, and GPS signal. An active connected plan is required.

Reference the SiriusXM user guide for use and subscription information.

Radio Reception

Unplug electronic devices from the accessory power outlets if there is interference or static in the radio.

FM

FM signals only reach about 16 to 65 km (10 to 40 mi). Although the radio has a built-in electronic circuit that automatically works to reduce interference, some static can occur, especially around tall buildings or hills, causing the sound to fade in and out.

AM

The range for most AM stations is greater than for FM, especially at night. The longer range can cause station frequencies to interfere with each other. Static can also occur when things like storms and power lines interfere with radio reception. When this happens, try reducing the treble on the radio.

SiriusXM Satellite Radio Service

If equipped, SiriusXM Satellite Radio Service provides digital radio reception. Tall buildings or hills can interfere with satellite radio signals, causing the sound to fade in and out. In addition, traveling or standing under heavy foliage, bridges, garages, or tunnels may cause loss of the SiriusXM signal for a period of time. Some cellular services may interfere with SXM reception causing loss of signal.

Mobile Device Usage

Mobile device usage, such as making or receiving calls, charging, or just having the mobile device on may cause static interference in the radio. Unplug the mobile device or turn it off if this happens.

Diversity Antenna System

The AM-FM antenna is a hidden self-tuning system. It optimizes the AM and FM signals relative to the vehicle's position and radio station source. No maintenance or adjustments are needed.

Audio Players

Avoiding Untrusted Media Devices

When using media devices such as USB and mobile devices, consider the source. Untrusted media devices could contain files that affect system operation or performance and should be avoided.

USB Port

Audio stored on a USB device may be listened to.

The vehicle may be equipped with two USB ports in the center console. These ports are for data and charging.

Caution
To avoid vehicle damage, unplug all accessories and disconnect all accessory cables from the vehicle when not in use. Accessory cables left plugged into the vehicle, unconnected to a device, could be damaged or cause an electrical short if the unconnected end comes in contact with liquids or another power source such as the accessory power outlet.

Playing from a USB

A USB mass storage device can be connected to the USB port.

Audio extensions supported by the USB may include:

- MP3
- AAC
- OGG
- 3GP

Gracenote

When plugging in a USB device, Gracenote service builds voice tags for music. Voice tags allow artists, albums with hard to pronounce names, and nicknames to be used to play music through voice recognition, if equipped.

While indexing, infotainment features may be available.

My Media Library

MyMedia is only available when more than one indexed device is connected. It allows access to content from all indexed media sources. MyMedia will show as an available source in the Source page.

USB MP3 Player and USB Devices

The USB MP3 players and USB devices connected must comply with the USB Mass Storage Class specification (USB MSC).

To play a USB device:

1. Connect the USB.
2. Touch Audio from the Home Page.
3. Touch the More option and then touch the USB device.

Use the following when playing an active USB source:

▷ **:** Touch to play the current media source.

II : Touch to pause playback of the current media source.

⏮ **:**

- Touch to seek the beginning of the current or previous track.
- Touch and hold to reverse quickly through playback. Release to return to playing speed. Elapsed time displays.

⏭ **:**

- Touch to seek the next track.
- Touch and hold to advance quickly through playback. Release to return to playing speed. Elapsed time displays.

Shuffle : Touch the shuffle icon to play music in random order.

USB Sound Menu

See “Infotainment System Sound Menu” under *AM-FM Radio* ⇨ *114*.

USB Browse Menu

When a list of songs, albums, artists, or other types of media displays, the up and down arrows and A-Z appear on the left side. Select A-Z to view a display that will show all letters of the alphabet and select the letter to go to.

Touch the up and down arrows to move the list up and down.

Touch Browse and the following may display:

Playlists:

1. Touch to view the playlists stored on the USB.
2. Touch a playlist to view the list of all songs in that playlist.
3. Touch a song from the list to begin playback.

Supported playlist extensions are m3u and pls.

Artists:

1. Touch to view the list of artists stored on the USB.
2. Touch an artist name to view a list of all albums by the artist.
3. To select a song, touch All Songs or touch an album and then touch a song from the list.

Songs:

1. Touch to display a list of all songs on the USB.
2. To begin playback, touch a song from the list.

Albums:

1. Touch to view the albums on the USB.
2. Touch the album to view a list of all songs on the album.
3. Touch a song from the list to begin playback.

Genres:

1. Touch to view the genres on the USB.
2. Touch a genre to view a list of artists.
3. Touch an artist to view albums by that artist.
4. Touch an album to view songs on the album.
5. Touch a song to start playback.

Composers:

1. Touch to view the composers on the USB.
2. Touch a Composer to view a list of albums by that composer.
3. Touch an album or All Songs to view a list of songs.
4. Touch a song from the list to begin playback.

Folders:

1. Touch to view the directories on the USB.
2. Touch a folder to view a list of all files.
3. Touch a file from the list to begin playback.

Podcasts : Touch to view the podcasts on the connected Apple device and get a list of podcast episodes.

Audiobooks:

1. Touch to view the audiobooks stored on the Apple device.
2. Touch an audiobook to get a list of chapters.
3. Touch the chapter from the list to begin playback.

File System and Naming

File systems supported by the USB may include:

- FAT32
- NTFS
- HFS+

The songs, artists, albums, and genres are taken from the file's song information and are only displayed if present. The radio displays the file name as the track name if the song information is not available.

Supported Apple Devices

To view supported devices, see my.chevrolet.com/learn.

Storing and Recalling Media Favorites

To store media favorites, touch Browse to display a list of media types.

Touch one of the following Browse options to save a favorite:

Playlists : Touch ☆ next to any playlist to store the playlist as a favorite. Touch a saved favorite to recall a favorite playlist. The first song in the playlist begins to play.

Artists : Touch ☆ next to any artist to store the artist as a favorite. Touch a saved favorite to recall a favorite artist. The first song in the artist list begins to play.

Songs : Touch ☆ next to any song to store the song as a favorite. Touch a saved favorite to recall a favorite song.

Albums : Touch ☆ next to any album to store the album as a favorite. Touch a saved favorite to recall a favorite album. The first song in the album list begins to play.

Genres : Touch ☆ next to any genre to store the genre as a favorite. Touch a saved favorite to recall a favorite genre. The first song of the genre begins to play.

Podcasts : Touch ☆ next to any podcast to store the podcast as a favorite. Touch a saved favorite to recall a favorite podcast. The podcast begins to play.

Audiobooks : Touch ☆ next to any audiobook to store the audiobook as a favorite. Touch a saved favorite to recall a favorite audiobook. The first chapter in the audiobook begins to play.

Media Playback and Mute

USB playback will be paused if the system is muted. If the steering wheel mute control is pressed again, playback will resume.

If the source is changed while in mute, playback resumes and audio will unmute.

Auxiliary Jack

If equipped, this vehicle has an auxiliary input jack in the center console. Possible auxiliary audio sources include:

- Laptop computer
- Audio music player

This jack is not an audio output. Do not plug headphones into the auxiliary input jack. Set up an auxiliary device while the vehicle is in P (Park).

Connect a 3.5 mm (1/8 in) cable from the auxiliary device to the auxiliary input jack. When a device is connected, the system can play audio from the device over the vehicle speakers.

If an auxiliary device has already been connected, but a different source is currently active, touch More and then touch AUX to make the source active.

Shuffle and Browse are not available in the AUX source menu.

Bluetooth Audio

Music may be played from a paired Bluetooth device. See *Bluetooth (Overview)* ⇨ *144* or *Bluetooth (Pairing and Using a Phone)* ⇨ *144* for help pairing a device.

Volume and song selection may be controlled by using the infotainment controls or the mobile device. If Bluetooth is selected and no volume is present, check the volume setting on the infotainment system.

Music can be launched by touching Bluetooth from the recent sources list on the left of the display or by touching the More option and then touching the Bluetooth device.

To play music via Bluetooth:

1. Power on the device, and pair to connect the device.
2. Once paired, touch Audio from the Home Page, then touch Bluetooth from the recent sources list on the left of the display.

Bluetooth Sound Menu

See “Infotainment System Sound Menu” under *AM-FM Radio* ⇨ *114*.

Manage Bluetooth Devices

From the Home Page:

1. Touch Audio.
2. Touch Devices to add or delete devices.

When touching Bluetooth, the radio may not be able to launch the audio player on the connected device to start playing. When the vehicle is not moving, use the mobile device to begin playback.

All devices launch audio differently. When selecting Bluetooth as a source, the radio may show as paused on the display. Press play on the device or touch ▷ on the vehicle display to begin playback.

Browse functionality will be provided where supported by the Bluetooth device. This media content will not be part of the MyMedia source mode.

Some smartphones support sending Bluetooth music information to display on the radio. When the radio receives this information, it will check to see if any is available and display it. For more information about supported Bluetooth features, visit your brand website. See *Online Account* ⇨ *321* for details.

See *Radio Frequency Statement* ⇨ *327*.

Navigation

Using the Navigation System

If equipped, launch the Nav application by touching the Nav icon on the Home Page or on the shortcut tray near the bottom of the infotainment display.

When the Nav application is launched for the first time, a product walkthrough is available. Use of the feature requires the Terms and Conditions and the Privacy statement to be confirmed. If available and signed into a profile, it is also suggested to enable and confirm Predictive Navigation.

Predictive Navigation (If Equipped)

If Predictive Navigation is available and confirmed, this feature learns preferences by remembering where the vehicle has been. It uses the locations and navigation history to personalize routes and results.

Predictive Navigation may learn elements such as:

- Personalized routes based on preferred streets.
- Search results that provide best matches at the top of the list.
- Predictive traffic.
- Local map content updating.

Predictive Navigation can also be enabled or disabled at a later time by touching ••• (Options). While in Options, touch Settings, then Map and Navigation Settings, and then Predictive Navigation. See *Settings* ⇨ *150*.

Navigation Map View

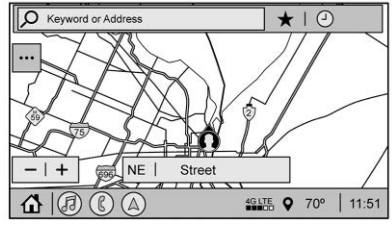

After opening the Nav application for the first time, the application will always open in full map view displaying the vehicle's current location. When the vehicle is stopped, the search bar will appear along the top of the navigation map view. Manually close the search bar by touching ✕. When the vehicle is moving, the 🔍 (Search) icon will replace the search bar to maximize the full map view.

Destination Card Preferences

From the Nav application, set up Home and Work addresses to enable one-touch navigation. To set up Home and Work addresses, touch ··· and select Settings, then Map and Navigation Settings, and then Destination Card Preferences. Show My Places on Map should be on by default. Select and enter Home and/or Work address and save.

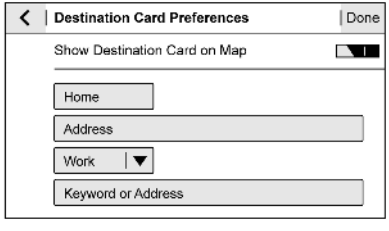

If the vehicle's system is not signed into a customized profile, the current location icon uses a generic symbol. Once signed into a customized profile, the current location symbol will show a customized icon. See *Navigation Symbols* ⇨ *125*.

Map and Navigation Settings

Touch ··· while in the map view to display options. The following may display:

- 3D Heading Up, 2D Heading Up, 2D North
- Show on Map
- Traffic Events (available with OnStar Connected Navigation)
- Settings
- Edit Destination (if a route has been set)
- Avoid on Route (if a route has been set)

Touch Settings to view Map and Navigation Settings. The following may display:

- Destination Card Preferences
- Map Preferences
- Route Preferences
- Navigation Voice Control
- Traffic Preferences
- Alert Preferences
- Fuel Grade Preferences
- Manage History
- Predictive Navigation: See "Predictive Navigation (If Equipped)" previously in this section.
- About

To exit a list, touch ✕ in the top right corner to return to the main map view.

Make sure to set up preferences before setting a destination and starting active guidance.

Map Preferences

Touch to choose between basic map feature configurations:

Map Colors

- Auto – Touch to automatically change modes based on lighting conditions.
- Day (Light)
- Night (Dark)

3D Landmark (Default is On) : Touch On or Off. When turned on, the system will display all 3D Landmarks on the map depending on the zoom level.

3D Building (Default is Off) : Touch On or Off. When turned on, the system will display all of the possible 3D building shapes on the map depending on the zoom level.

Show Terrain in 3D (Default is Off) : If equipped, touch On or Off. When turned on, the system will display terrain information on the map in 3D view.

Auto-Zoom (Default is On) : Touch On or Off. When turned on, the system will automatically adjust the zoom level when the vehicle is approaching a turn. After the

turn is completed, the system automatically brings the zoom back to the originally set level. If the vehicle is approaching a turn with the next turn occurring shortly after, the Auto-Zoom will remain on until both turns are completed.

Route Preferences

Touch to access the Route Preferences. The choices are:

- Preferred Route – Choose from two different route options: Fastest or Eco-Friendly.
  - Fastest would be the route with the shortest drive time.
  - Eco-Friendly would be the most fuel-efficient route.
- Avoid on Current Route – Choose any of the road features to avoid while on route:
  - Highways
  - Unpaved Roads
  - Ferries
  - Carpool Lanes
  - Toll Roads
  - Tunnels
  - Country Borders

Navigation Voice Control

Touch to access the voice control setting display.

- Navigation Volume – To adjust the volume level, touch the up and down arrows. If the voice guidance prompt is being heard, volume can also be adjusted using the knob on the center stack or the volume switch on the steering wheel.
- Navigation Voice Prompt Level during a Call. Options available are:
  - Full Prompt (Selected by default)
  - Tone Only
  - None

Traffic Events (If Equipped)

This feature provides a list of events that are on the route or nearby. Touch ··· and then select Traffic Events. An OnStar connected Navigation service plan is required.

Traffic Preferences (If Equipped)

While in Map View, touch ···, then Settings and then Map and Navigation Settings to access Traffic Preferences. When Show Traffic on Map is turned on, the feature provides an overview of the traffic flow using different coded colors. The following options are available for rerouting:

- Auto Reroute to Better Route – The system will automatically reroute if the system detects there is a traffic issue ahead.
- Ask Before Rerouting (Default) – If the system detects there is a traffic issue ahead, it will display a pop-up with details about the issue. Choose to reroute or cancel the alert.
- Never Search for Better Route – The system will not check for a better route until one of the above options is selected.

Alert Preferences

Set alerts on or off during both inactive and active guidance views. The following alerts may be available:

- Road Safety Alerts – Touch to display upcoming School Zones.
- Traffic Camera Alerts

Manage History

Touch Manage History to access the History options:

- Clear Recent Destinations – Touch ⊗ to clear the recent destinations.

- Clear Search History – Touch ⊗ to clear the search history.

About

Touch to display software information, such as:

- Telenav Terms and Conditions
- Telenav Privacy Statement
- Navigation Version

Maps

The Nav application requires a map database to run. It is stored on an SD card that is connected to the infotainment system. If the map database is not available, a missing SD card error message will be displayed.

SD Card Error Messages

The SD card only works for one unique vehicle. The SD card must pass authentication verification to be used for that specific vehicle. If the SD card has a switch that can be set to read-only mode, ensure that it is in the upward position and not in read-only.

Potential error scenarios and messages include:

- The SD card has initialized for the first time: “Once initialized, this SD card can only be used for navigation in this vehicle.” Make sure the SD card switch is in an upward position.
- The SD card is not working properly: “SD card is not functioning properly. (Error Code).”
- The SD card is not paired with the existing system: “This SD card is not valid in this vehicle for navigation. See Owner’s Manual for more detail or visit your dealer. (Error Code).”
- The SD card has been removed from the slot: “SD card has been removed. (Error Code).” Make sure the Nav SD card is in the slot.

Touch Confirm to resume after the initialization error message. For the other messages, touch OK to return to the Home Page.

If any errors continue, see your dealer.

Navigation Symbols

Following are the most common symbols that may appear in the Nav application.

This indicates the vehicle’s current location and direction on the map.

This is the vehicle’s current location icon during inactive guidance mode. Once a user profile is created, the current location icon can be customized.

This icon indicates the vehicle’s current location and direction on the map.

The destination pin marks the location of the final destination. Touch the pin to view the destination address or to add it or remove it from the Favorites list. Hide the information by touching the pin one more time. It will automatically time out if no action is taken.

If equipped, smart Points of Interest (POIs) are places of interest for parking and gas stations.

The progress bar provides an overview of the route progress and may show traffic and incidents along the way. As the route proceeds, the vehicle icon moves up the bar.

Touch the icon to zoom out on the map and view the entire route. Touch it again to return to the previous view.

View the drive time by touching the estimated time of arrival (ETA).

Current Location

When the vehicle is parked and not in a Navigation session, the user icon is centered on the map view, highlighting the current location.

Destination

Receiving Destination Directions from Different Sources

Destinations can be received or transferred from different sources to the Nav application for route guidance. If equipped, some of these sources may include:

- Navigation from search results.
- OnStar Advisor destination download.
- An address from the Contacts list.
- An application on the smartphone that can send destinations to the vehicle.
- An application downloaded to the vehicle such as OnStar Services that can send destinations to the navigation system.

Waypoints

Add up to five waypoints, which are additional destinations, along the route. To add an additional stop or waypoint:

1. From active guidance, touch 🔎.
2. Search for the destination using One-Box, Voice search, or the Quick Category icons.
3. Choose search results Along Route, Nearby, or Near Destination.
4. Choose the desired waypoint and touch Add to Trip or replace the current destination by touching New Destination.

Route options are not available for waypoints.

Arriving at a Waypoint

When approaching a waypoint, the system will display a Destination Arrival view. To continue on to the next destination touch the Drive to message on the infotainment display.

If the vehicle passes the waypoint or gets out of the current route, the system will automatically reroute back to this waypoint. At the same time, it will show a Drive to icon along with the next waypoint address so the current waypoint can be skipped and guidance can resume to the next waypoint or destination.

Editing a Waypoint

When waypoints are added during active guidance, the system allows a stop to be deleted or the order to be changed. To edit a waypoint:

1. Touch ⋯.
2. Touch Edit Destinations.
   - Modify destination order by touching and holding the arrow until it is highlighted. Drag to move the waypoint up or down the list.
   - Delete a waypoint by touching 🗑. A pop-up will appear to confirm waypoint removal. Once the request is confirmed, the system will remove the address from the destinations list. Touch ✕ on the top right corner so the system can recalculate the route. If there is only one address in the destinations list, the system will disable the move and delete functions. The system will not allow the final destination to be deleted.

Map Information

Road network attributes are contained in the map database for map information. Attributes include information such as street names, street addresses, and turn restrictions. A detailed area includes all major highways, service roads, and residential roads. The detailed areas include Places of Interest (POIs) such as restaurants, airports, banks, hospitals, police stations, gas stations, tourist attractions, and historical monuments.

If the vehicle does not have an applicable service plan, the map database may not include data for newly constructed areas or map database corrections that are completed after production. The navigation system provides full route guidance in the detailed map areas.

Zoom Control

The zoom control display is shown on the map view. A few ways to zoom in or out are:

- Touch + or – to zoom in or out on the map.
- Double tap with one finger to zoom in or single tap with two fingers to zoom out on the map.
- Use the index finger and thumb to zoom out by pinching and then zoom in by spreading those two fingers on the map.

Map Gestures and Map Scale

Use the following gestures on the infotainment display to adjust the map scale and display options.

- Pinch to zoom in or out.
- Pan the map.
- Use two fingers to tilt down and change from 2D to 3D. Tilt up to change back to 2D.
- Rotate the map.

See *Using the System* ⇨ *112*.

Mute

When in active guidance, the audio prompts while using navigation can be muted. Touch the speaker icon on the right side of the upper bar. A slash will appear on the speaker to indicate voice guidance is muted.

Active Guidance View

When a destination is chosen and a navigation session is active, the navigation system enters into an Active Guidance View (AGV).

Map Orientation

Touch ··· on the map to access map orientation settings. Map orientation is 3D Heading Up by default.

Available settings are:

- 3D Heading Up (Default): 3D map with the vehicle pointing up. In this mode, the current location icon will always head up and the map will rotate around it.
- 2D Heading Up: 2D map with the vehicle pointing up. In this mode, the current location icon will always head up and the map will rotate around it.
- 2D North Up: 2D map with North pointing up. In this mode, the current location icon will shift as the vehicle turns left and right.

Touch the icon to change the map type. The icon and label will also update accordingly.

Depending on the zoom level of the 2D Heading Up and 3D Heading Up maps, the system may automatically switch to the 2D North Up map.

When in AGV, the entire route can be viewed in 2D North Up by touching the traffic bar. The map will zoom out and readjust to display the full route. When in 2D North Up Route View, the Recenter icon will appear in the middle of the display. Touch either the Recenter icon or the traffic bar again to return to the previous view, either 2D or 3D.

Lane Guidance

The map will display the lane information for the upcoming maneuver if it is available.

Junction View

When a vehicle is on the highway and approaching the exit, an image displays the lane that the vehicle must stay in to complete the next maneuver.

Quick-Turn View

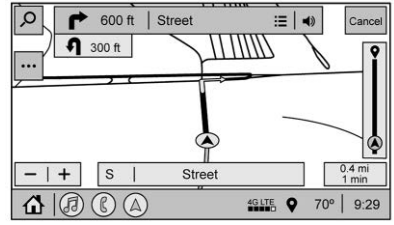

When the vehicle is approaching a turn with the next turn following in quick succession, a quick-turn list appears below the primary turn indicator. An audio prompt will announce the quick turn.

Auto-Zoom

When approaching a maneuver, the map will automatically zoom in to show both the vehicle icon and the upcoming maneuver to give a better view of the maneuver. Once the maneuver is complete, the system will zoom back to the previous zoom level.

Touch ··· on the map to access Settings, then touch Map Preferences to access Auto-Zoom. This feature can be enabled or disabled.

Directions

Touch the menu option next to the next turn street name to display Directions.

Directions displays the turns and directions from the current location to the final destination.

Editing Directions

Directions can be edited by choosing , which expands the list to fill the display and enters the Edit Mode. While in Edit Mode, an unwanted route segment can be removed from the route by touching next to the segment. A pop-up appears to confirm segment removal.

When the route segment has been removed, all segments are replaced by an activity indicator while the new route is recalculated. When the recalculation is complete, the activity indicator is replaced with the new route segments.

Highway Exits List

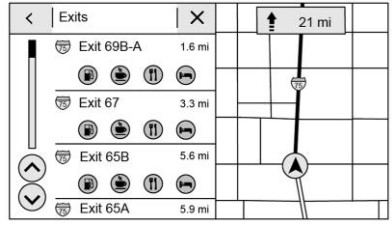

Touch to open the Exit list. This icon displays next to the current street name near the bottom of the display. The icon only appears when on a highway with defined exits.

While traveling on roads with designated exits, an Exit list may be available. The Exit list displays the exit number, distance to the exit from the current vehicle position, and convenience stops that may be available, such as gas, coffee, food, and lodging.

Next Maneuver Menu

When in Active Guidance, the Next Maneuver Turn Arrow, Street Name, and Maneuver Distance are shown in the Next Maneuver at the top of the display overlaying the map. ETA, Distance to Destination, and Traffic Indicator are displayed in a panel pinned on the right of the display.

Navigation Next Turn Maneuver Alert

If the Navigation application is not open when a near maneuver prompt is given, it is shown as an alert. Touch the alert to go to the main navigation view or touch X to dismiss the alert.

Repeat Voice Guidance

This symbol indicates the next guidance maneuver. Touch it to repeat the last spoken guidance instruction.

Incident Alert (If Equipped)

During active guidance, if the system determines that there is an incident ahead but there is not a better route, the system will play a tone and show a Quick Notice. This will only show once per incident.

Incident Reports (If Equipped)

Incident report icons, along with traffic flow data, display on the map during both active and inactive guidance.

End Route

Touch Cancel at the top right corner to end active guidance and return to inactive guidance. If active guidance is canceled before the destination has been reached, a pop-up option to Resume Trip will appear.

Resume Trip

The trip can be resumed if it was canceled by touching the Resume Trip pop-up option.

If the system has determined that the destination has been reached, either because the arrival view displayed or the destination has been passed, the Resume Trip option will not appear.

Favorites

The navigation favorites can have contacts, addresses, or POIs that have been saved through the favorite icon on the details view.

Accessing Favorites

In the Nav application, view the Favorites list by touching ☆ in the search bar along the top of the Nav map view. If the search bar is closed, touch 🔍 and select ☆.

Saving Favorites

Favorites can be added from a number of the system's applications. Touch the favorites icon to save content as a favorite.

Renaming Navigation Favorites

1. Touch the Settings icon on the Home Page and touch the System tab.
2. Touch Favorites to access the Manage Favorites option.
3. Touch a saved Navigation favorite to access the edit icon. Touch the edit icon to rename the favorite.
4. Touch Save to store the renamed favorite.

Recents

Touch ◷ to access a list of recent destinations.

Recenter Position Icon

Touch the Recenter Position arrow in the middle of the map view to reset the map to the current location.

Last Parked Location

The Last Parked Location is the last location the vehicle engine was turned off. That location is displayed in the first row of the Recents list. Touching the last Parked Location shows the Address Details view to either save the address or drive to it. The Last Parked Location can be deleted by entering the Edit display. Once the Last Parked Location is deleted, it no longer appears in the Recents list, unless the vehicle is started at that location again.

Show POI Icons

To see the POI categories, touch Options, then touch Show on Map. Up to eight categories of icons can be selected.

Smart POI Icons on Map (If Equipped)

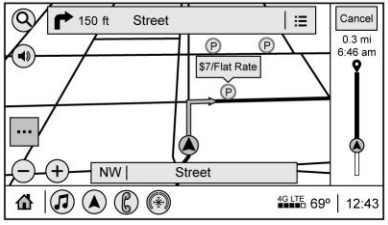

The smart POI icons such as fuel stations and parking may appear based on time, location, driver search behavior, driving conditions, and vehicle conditions.

Touch a smart POI icon to open the corresponding details:

- Left side: Name and address of the POI.
- Right side: + ETE (Estimated Time Enroute.)

Smart Fuel Station Icons

Fuel station prices are shown if available for nearby stations when the vehicle is low on fuel.

Smart Parking Icons

When reaching a densely populated destination and the system determines that parking may be limited, the system will attempt to display nearby parking destinations with pricing information, if available.

Report an Issue Using POI Details (If Equipped)

In the POI details page, a POI issue can be reported if the data is not accurate or the address is incorrect. Touch Report an Issue near the bottom of the display to access the issue selection page. Touch one of the predefined issues on the selection page, then touch Send. The system will send the information for analysis.

Search

Touch Search on the infotainment display to open the search display. It has a search field entry box, quick category icon shortcuts, recents icon, favorites icon, and keyboard.

Auto Complete

Enter a partial location in the field entry box on the search display. Auto complete will attempt to complete the destination based on what is being entered. Touch the suggested item to search.

Search While in Motion with No Front Seat Passenger Present

The search display will not allow changes or text input with the keyboard when the vehicle is in motion. As a result, a display showing three rows of the most commonly used categories appears. Touching the search box will activate speech recognition.

Search While in Motion with Front Seat Passenger Present

If the system detects that the front seat passenger is present with both driver and passenger seat belts buckled, touching the search icon will display an alert message that allows the passenger to search for a destination as if the vehicle were stopped.

Connected Navigation

Connected Navigation is a subscription service that enables certain capabilities within the navigation system, such as Traffic, Smart Search/Routing, and Predictive Navigation capabilities. The system will show an alert when the subscription is expiring and will ask to renew the plan.

Global Positioning System (GPS)

If equipped, the position of the vehicle is determined by using satellite signals, various vehicle signals, and map data.

At times, other interference such as the satellite condition, road configuration, condition of the vehicle, and/or other circumstances can affect the navigation system's ability to determine the accurate position of the vehicle.

The GPS shows the current position of the vehicle using signals sent by GPS satellites. When the vehicle is not receiving signals from the satellites, a symbol appears in the status bar.

This system might not be available or interference can occur if any of the following are true:

- Signals are obstructed by tall buildings, trees, large trucks, or a tunnel.
- Satellites are being repaired or improved.

For more information if the GPS is not functioning properly, see *Problems with Route Guidance* ⇨ *132* and *If the System Needs Service* ⇨ *133*.

Vehicle Positioning

At times, the position of the vehicle on the map could be inaccurate due to one or more of the following reasons:

- The road system has changed.
- The vehicle is driving on slippery road surfaces such as sand, gravel, or snow.
- The vehicle is traveling on winding roads or long, straight roads.
- The vehicle is approaching a tall building or a large vehicle.
- The surface streets run parallel to a freeway.
- The vehicle has been transferred by a vehicle carrier or a ferry.
- The current position calibration is set incorrectly.
- The vehicle is traveling at high speed.
- The vehicle changes directions more than once, or the vehicle is turning on a turn table in a parking lot.
- The vehicle is entering and/or exiting a parking lot, garage, or a lot with a roof.
- The GPS signal is not received.
- A roof carrier is installed on the vehicle.
- Tire chains are installed on the vehicle.
- The tires are replaced or worn.
- The tire pressure for the tires is incorrect.
- This is the first navigation use after the map data is updated.
- The 12-volt battery has been disconnected for several days.
- The vehicle is driving in heavy traffic where driving is at low speeds, and the vehicle is stopped and started repeatedly.

Problems with Route Guidance

Inappropriate route guidance can occur under one or more of the following conditions:

- The turn was not made on the road indicated.
- Route guidance might not be available when using automatic rerouting for the next right or left turn.
- The route might not be changed when using automatic rerouting.
- There is no route guidance when turning at an intersection.
- Plural names of places might be announced occasionally.
- It could take a long time to operate automatic rerouting during high-speed driving.

- Automatic rerouting might display a route returning to the set waypoint if heading for a destination without passing through a set waypoint.
- The route prohibits the entry of a vehicle due to a regulation by time or season or any other regulation which may be given.
- Some routes might not be searched.
- The route to the destination might not be shown if there are new roads, if roads have recently changed, or if certain roads are not listed in the map data. See *Maps* ⇨ *125*.

To recalibrate the vehicle's position on the map, park with the vehicle running for two to five minutes, until the vehicle position updates. Make sure the vehicle is parked in a location that is safe and has a clear view of the sky and away from large obstructions.

If the System Needs Service

If the navigation system needs service, see your dealer.

Map Data Updates

The map data in the vehicle is the most up-to-date information available when the vehicle was produced. The map data is updated periodically, provided that the map information has changed and the vehicle has a relevant service plan.

See www.gmnavdisc.com for details on ordering, purchasing, and installing a new or replacement SD card. Features are subject to change. For more information on this feature, visit your brand website. See *Online Account* ⇨ *321* for details.

If the vehicle is equipped with Connected Navigation, which is a subscription service that enables certain features of the navigation system, such as Traffic, Smart Search/Routing, and Predictive Navigation, then the system will download the latest map data from the cloud.

Database Coverage Explanations

Coverage areas vary with respect to the level of map detail available for any given area. Some areas feature greater levels of detail than others. If this happens, it does not mean there is a problem with the system. As the map data is updated, more detail can become available for areas that previously had limited detail. See *Map Data Updates* ⇨ *133*.

Voice Recognition

If equipped, voice recognition allows for hands-free operation within the navigation, audio, phone, and weather applications. This feature can be started by pressing on the steering wheel or touching on the infotainment display.

However, not all features within these areas are supported by voice commands. Generally, only complex tasks that require multiple manual interactions to complete are supported by voice commands.

For example, tasks that take more than one or two touches, such as a song or artist to play from a media device, would be supported by voice commands. Other tasks, like adjusting the volume or seeking up or down, are audio features that are easily performed by touching one or two options, and are not supported by voice commands.

In general there are flexible ways to speak commands for completing the tasks.

If your language supports it, try stating a One-Shot command, such as “Directions to address <number, street, city, state/province>.” Do not include the ZIP code while stating the address during the

command. Another example of a One-Shot Destination Entry command is, “Directions to Place of Interest at <hotel>.” If these commands do not work, try saying, “Take me to Place of Interest” or “Find address” and the system will walk you through by asking additional questions.

Hybrid Speech Recognition

If equipped, this feature helps distinguish words by using Internet-based information along with the system’s voice recognition database. This allows you to speak more naturally when using voice recognition.

Using Voice Recognition

Voice recognition becomes available once the system has been initialized. This begins when the ignition is turned on. Initialization may take a few moments.

1. Press on the steering wheel controls to activate voice recognition.
2. The audio system mutes and the system plays a prompt.
3. Clearly speak one of the commands described in this section.

   A voice recognition system prompt can be interrupted while it is playing by pressing again.

Once voice recognition is started, both the infotainment display and instrument cluster show the selections and visual dialog content. These displays can be turned on or off in the Tutorial Mode under *Settings* ⇨ *150*.

There are three voice prompt modes supported:

- Informative verbal prompts: This type of prompt will provide more information regarding the supported actions.
- Short prompts: This type of prompt will provide simple instructions about what can be stated.
- Auto informative prompts: This type of prompt plays during the first few speech sessions, then automatically switches to the short prompt after some experience has been gained through using the system.

If a command is not spoken, the voice recognition system says a help prompt.

Prompts and Infotainment Displays

While a voice recognition session is active, there may be corresponding options showing on the displays. A selection can be made by manually touching the option, or by speaking the number for the option to select. Manual interaction in the voice recognition session is permitted. Interaction during a voice session may be completed entirely using voice commands while some manual commands may expedite a task. If a selection is made using a manual control, the voice recognition dialog will progress in the same way as if the selection were made using a voice command. Once the system completes the task, or the session is terminated, the voice recognition dialog stops.

An example of this type of manual intervention is touching an entry of a displayed number list instead of speaking the number associated with the entry desired.

Canceling Voice Recognition

- Touch or say “Cancel” or “Exit” to terminate the voice recognition session and show the display where voice recognition was initiated.
- Press on the steering wheel controls to terminate the voice recognition session and show the display where voice recognition was initiated.

Natural Language Commands

Most languages do not support natural language commands in sentence form. For those languages, use direct commands like the examples shown on the display.

Helpful Hints for Speaking Commands

Voice recognition can understand commands that are naturally stated in sentence form or direct commands that state the application and the task.

For best results:

- Listen for the prompt before saying a command or reply.
- Speak the command naturally, not too fast, not too slow.
- Use direct commands without a lot of extra words. For example, “Call <name> at work,” “Play” followed by the artist or song name, or “Tune” followed by the radio station number.
- Navigation destinations can be made in a single command using keywords. A few examples are: “I want directions to an address,” “I need to find a place of interest or (POI),” or “Find contact.”

  The system responds by requesting more details. For other POIs, say the name of a category like “Restaurants,” “Shopping Malls,” or “Hospitals.”
- Navigating to a destination outside of the current country takes more than one command. The first command is to tell the system where the navigation will take place, such as an Address, Intersection, POI, or Contact. If Address or Intersection is selected, the second command is to say, “Change Country.” Once the system responds, say the country before saying the rest of the address and/or intersection.

  If POI is asked for, say “Change Location,” then “Change Country.”

Direct commands might be more clearly understood by the system. An example of a direct command would be “Call <number>.” Examples of these direct commands are displayed on most of the screens while a voice session is active. If “Phone” or “Phone Commands,” is spoken, the system understands that a phone call is requested and will respond with questions until enough details are gathered to make a call.

If a cell phone number has been saved with a name and a place, the direct command should include both, for example “Call <name> at work.”

Using Voice Recognition for List Options

When a list is displayed, a voice prompt will ask to confirm or select an option from that list.

When a display contains a list, there may be options that are available but not displayed. The list on a voice recognition screen functions the same as a list on other displays. Scrolling or flinging can be used to help display other entries from the list.

Manually scrolling or paging the list on a display during a voice recognition session suspends the current voice recognition event and plays the prompt “Please select manually or touch the Back icon on the infotainment display to try again.”

If manual selection takes more than 15 seconds, the session terminates and prompts that it has timed out. The display returns to the display where voice recognition was initiated.

The Back Command

Say “Back” or touch the Back icon on the infotainment display to go to the previous menu.

If in voice recognition, and “Back” is spoken all the way back to the starting display, and then “Back” is spoken one more time, the voice recognition session will cancel.

Help

Say “Help” on any voice recognition display and the help prompt for the display is played.

Voice Recognition for the Radio

If browsing the audio sources when voice is touched, the voice recognition commands for AM, FM, and SiriusXM (if equipped) are available.

“Switch to AM” : Switch bands to AM and tune to the last AM radio station.

“Switch to FM” : Switch bands to FM and tune to the last FM radio station.

“Switch to SXM” : Switch bands to SiriusXM and tune to the last SiriusXM channel.

“Tune to <AM frequency> AM” : Tune to the radio station whose frequency is identified in the command (like “nine fifty”).

“Tune to <FM frequency> FM” : Tune to the radio station whose frequency is identified in the command (like “one oh one point one”).

“Tune to <AM frequency> AM HD” : Tune to the HD Radio station whose frequency is identified in the command.

“Tune to <FM frequency> FM HD” : Tune to the HD Radio station whose frequency is identified in the command.

“Tune to <FM frequency> FM HD <HD channel number>” : Tune to the HD Radio station whose frequency and HD channel are identified in the command.

“Tune to SXM <SXM channel number>” : Tune to the SiriusXM radio station whose channel number is identified in the command.

“Tune to SXM <SXM channel name>” : Tune to the SiriusXM radio station whose channel name is identified in the command.

Voice Recognition for Audio MyMedia

The available voice recognition commands for [browsing] MyMedia are:

“Play Artist” : Begin a dialog to enter a specific artist name.

“Play Artist <artist name>” : Begin playback of a specific artist.

“Play Album” : Begin a dialog to enter a specific album name.

“Play Album <album name>” : Begin playback of a specific album.

“Play Song” : Begin a dialog to enter a specific song name.

“Play Song <song name>” : Begin playback of a specific song, if available.

“Play Genre” : Begin a dialog to enter a specific genre.

“Play Genre <genre name>” : Begin playback of a specific genre.

“Play Playlist” : Begin a dialog to enter a specific playlist name.

“Play Playlist <playlist name>” : Begin playback of a specific playlist.

“Play <device name>” : Play music from a specific device identified by name. The device name is the name displayed on the display when the device is first selected as an audio source.

“Play Chapter” : Begin a dialog to enter a specific name.

"Play Chapter <chapter name>" : Begin playback of a specific chapter.

"Play Audiobook" : Begin a dialog to enter a specific audiobook.

"Play Audiobook <audiobook name>" : Begin playback of a specific audiobook.

"Play Episode" : Begin a dialog to enter a specific name.

"Play Episode <episode name>" : Begin playback of a specific episode.

"Play Podcast" : Begin a dialog to enter a specific podcast.

"Play Podcast <podcast name>" : Begin playback of a specific podcast.

"My Media" : Begin a dialog to enter the desired media content.

Handling Large Amounts of Media Content

It is expected that large amounts of media content will be brought into the vehicle. It may be necessary to handle large amounts of media content in a different way than smaller amounts of media. The system may limit the options of voice recognition by not allowing selection of files by voice at the highest level if the number of files exceeds the maximum limit.

Changes to voice commands due to media content limits are:

- Files including other individual files of all media types such as songs, audiobook chapters, podcast episodes, and videos.
- Album type folders including types such as albums and audiobooks.

There are no restrictions if the number of files and albums is fewer than 12,000. When the number of files connected to the system is between 12,000 and 24,000, the content cannot be accessed directly with one command like "Play <song name>."

The restriction is that the command "Play Song" must be spoken first; the system will then ask for the song name. The reply command would be to say the name of the song to play.

Similar limits exist for album content. If there are more than 12,000 albums, but fewer than 24,000, the content cannot be accessed directly with one command like, "Play <album name>." The command "Play Album" must first be spoken; the system will then ask for the album name. The reply would be to say the name of the album to play.

Once the number of files has exceeded approximately 24,000, there is no support for accessing the songs directly through voice commands. There will still be access to the media content by using commands for playlists, artists, and genres.

The access commands for playlists, artists, and genres are prohibited after the number of this type of media exceeds 12,000.

The system will provide feedback the first time voice recognition is initiated if it has become apparent that any of these limits are reached during a device initializing process.

Voice recognition performance will degrade to some extent based on many factors when adding large amounts of data to recognize. If this is the case, perhaps accessing songs through playlists or artist name would work better.

Voice Recognition for Navigation

"Navigation" : Begin a dialog to enter specific destination information.

"Navigation Commands" : Begin a dialog to enter specific destination information.

"Address" : Begin a dialog to enter a specific destination address, which includes the entire address consisting of the house number, street name, city, state/province, and country. Do not include the ZIP code.

"Place of Interest" : Begin a dialog to enter a destination Place of Interest category or major brand name.

The name must be precisely spoken. Nicknames or short names for the businesses will not likely be found. Lesser known businesses might have to be located by category, such as fast food, hotels, or banks.

"Navigate to Contact" : Begin a dialog to enter a specific destination contact name.

"Cancel Route" : End route guidance.

"Take Me Home" : Create a route to a stored home location.

Voice Recognition for the Phone

"Call <contact name>" : Initiate a call to a stored contact. The command may include location if the contact has location numbers stored.

"Call <contact> At Home," "At Work," "On Mobile," or "On Other" : Initiate a call to a stored contact and location at home, at work, on mobile device, or on another phone.

"Call <cell phone number>" : Initiate a call to a cell phone number of seven digits, 10 digits, or three digit emergency numbers.

"Pair Phone" : Begin the Bluetooth pairing process. Follow the instructions on the infotainment display.

"Redial" : Initiate a call to the last dialed number.

"Switch Phone" : Select a different connected cell phone for outgoing calls.

"Voice Keypad" : Begin a dialog to enter special numbers like international numbers. The numbers can be entered in groups of digits with each group of digits being repeated back by the system. If the group of digits is not correct, the command "Delete" will remove the last group of digits and allow them to be re-entered. Once the entire number has been entered, the command "Call" will start dialing the number.

Phone Assistant Voice Recognition

Press and hold on the steering wheel controls to pass through and launch Google phone assistant or Siri.

For the low radio, whether connected by Bluetooth or phone projection, the only available voice recognition is either Siri (iPhone) or the Google Assistant (Android).

Performance Data Recorder (PDR)

If equipped, the PDR icon displays on the Home Page.

Important Information

Use of the PDR may be prohibited or legally restricted in certain countries and situations. Ensure compliance with applicable laws and regulations, including, but not limited to: privacy laws, laws related to camera surveillance and recordings, road traffic and security laws, and laws on the protection of publicity and personality rights.

- Do not use the PDR if it causes distraction.
- Do not rely on camera footage to steer the vehicle.

- Comply with any notice and consent requirements before capturing and/or recording the voices or images of other persons or before collecting other personal data.
- Notify other drivers of your vehicle about the above rules and require them to comply.
- General Motors does not accept any responsibility or liability in connection with use that is not permitted.
- Law enforcement authorities may have the right to seize video recordings and use them as evidence of criminal/driving offenses against you or third parties.

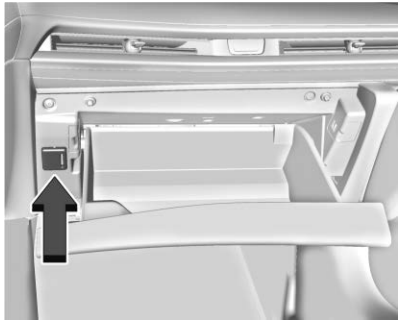

The PDR records video, audio, and vehicle data. The forward facing video and cabin audio are captured by a camera and microphone located behind the rear view mirror. The PDR video and data is stored on a removable SD card located in the SD card reader in the glove box. The video (MP4) can be played back in the vehicle or the SD card can be removed and played in a PC or on a mobile device or the file can be viewed and analyzed within Toolbox. See Toolbox later in this section.

The recorded data is not stored anywhere else and is only accessible from the SD card.

To optimize PDR performance, it is recommended that the SD card is formatted on a regular basis. Back up all recordings on the SD card prior to formatting. Formatting the SD card will delete all saved recordings.

If a system error code is seen on the display, such as "System Error Code ####", please check the health of the SD card. It may need to be reformatted or replaced. If the issue persists, please see your dealer.

To begin, insert an exFAT formatted SD card, Class 10 required, 16 GB or larger recommended, into the glove box SD card reader.

Touch the PDR icon to access the PDR menu. Touch the PDR tab. The options displayed are:

Start Recording

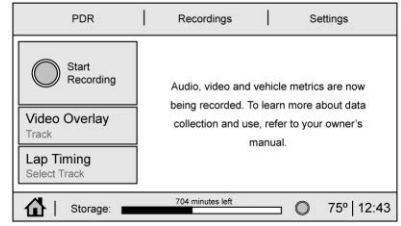

If the system is unable to begin recording, the Start Recording button is grayed out.

Touch Start Recording to begin recording. After recording begins, this button changes to Stop Recording. Touch to stop the recording session.

The recording must be stopped and the file closed before removing the SD card, or the recording cannot be reviewed.

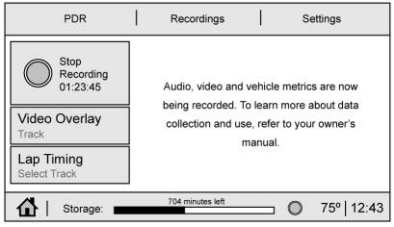

The elapsed time will show when recording.

The following errors or warnings may be displayed while recording:

- Storage Full
- No Storage Available
- System Error
- SD Card Error
- SD Card Speed Insufficient
- GPS Accuracy Warning
- SD Card Write Protected

Video Overlay

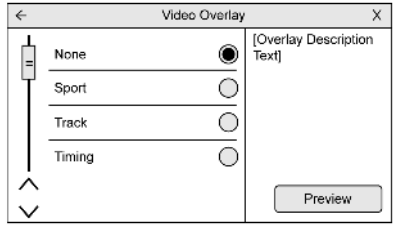

Touch Video Overlay to display the menu screen.

Touching preview provides a live preview of the overlay selected.

Select one:

- None
- Sport
- Track
- Timing

None:

No vehicle data displays on top of the recorded video. Vehicle data is still available with the video when accessed in the toolbox software. See www.chevrolet.com/performance-data-recorder to download Toolbox Software.

Sport:

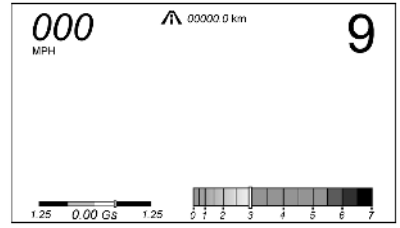

Displays these vehicle metrics:

- Vehicle Speed: Up to three digits are displayed in km/h or MPH depending on vehicle settings.
- Engine Revolutions Per Minute (rpm): The vertical line and triangle show current rpm's. As the rpm's increase, the backfill follows.
- Transmission State (Current Gear): Transmissions display 1, 2, etc.
- Lateral G-Force Graphic: Left and Right G-Forces are displayed. The graphic fills to the left or the right depending on the measure value. The measured G-Force displays as a number at the top of the graphic.
- Event Odometer: This displays the distance driven since the recording began.

Track:

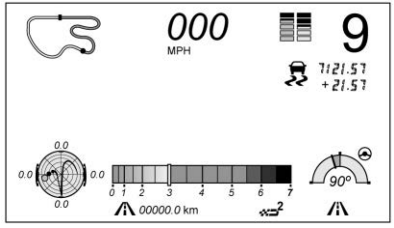

Displays these vehicle metrics:

- Vehicle Speed: Same as Sport.
- GPS Tracking Map: Shows the vehicle's current position relative to a known route.
- Engine Revolutions Per Minute (rpm): The vertical line and triangle show current rpm's. As the rpm's increase, the backfill follows.
- Transmission State (Current Gear): Same as Sport.
- Friction Bubble Graphic: Lateral and longitudinal G-Forces are displayed as a dot within a bubble. A red dot displays when the vehicle starts braking and turns green when the vehicle accelerates. The dot is white when the vehicle is not moving. A white dot is the default.
- Brake and Throttle Graphic: Displays the percentage value of brake and throttle pedal position from 0–100%.
- Steering Angle: The graphic fills from the center to the left or right depending on the direction of steering. The numerical steering angle displays below the graphic.
- Active Handling Active Indicator: The graphic only displays if the active handling systems are activated.
- Performance Traction Management (PTM) Mode: Displays the current PTM mode. The options are Wet, Dry, Sport 1, Sport 2, or Race.
- Current Lap Time: Displays the elapsed lap time if the finish line is defined and the vehicle has crossed the defined finish line at least once.
- Event Odometer: This displays the distance driven since the recording began.
- Drive Mode: Displays the vehicle's current drive mode.

Timing:

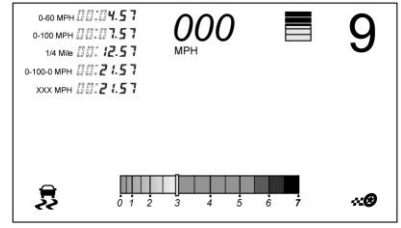

Displays these vehicle metrics:

- Vehicle Speed: Same as Sport.
- Engine Revolutions Per Minute (rpm): Same as Sport.
- Transmission State (Current Gear): Same as Sport.
- Throttle Position: Displays the percentage of throttle applied from 0–100%.
- Active Handling Active Indicator: The graphic only displays if the active handling systems are activated.

Once the Timing Overlay is selected, touch Configure in the lower right corner to choose which performance timing metrics you would like to display on the Timing Video Overlay.

- 0–100 km/h (0–60 mph)
- 0–200 km/h (0–100 mph)

- 0–200–0 km/h (0–100–0 mph)
- 400 m (1/4 th mi)
- Custom Speed Timer

The timer starts recording as soon as the vehicle accelerates. As the vehicle passes each speed and distance milestone, it is displayed on the overlay.

Lap Timing

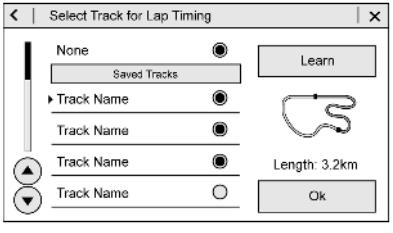

Touch Lap Timing on the PDR tab to display the track selection screen.

- Select Custom Track, then Learn to create a new custom track for lap timing.
- Select Custom Track, then Relearn if a custom track has already been defined and is available on the storage device.
- Only one track can be learned during each recording session. To learn a new track, end the current recording and start a new one.

Custom Track Learning - Circuit

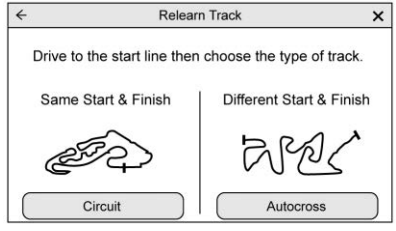

- Select Circuit as the track type.
- Touch Learn when at the starting line.
- Circuit track learning will complete automatically when the vehicle crosses the start/finish line.
- Touch Cancel to stop the learning process.

Custom Track Learning - Autocross

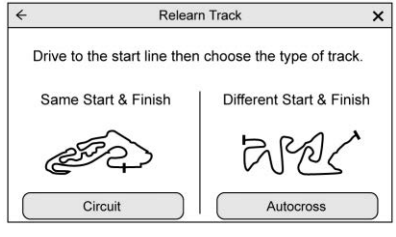

- Select Autocross as the track type.
- Touch Learn when at the starting line.
- Drive along the course and press Finish when the vehicle has reached the Finish Line.
- Touch Cancel to stop the learning process.

Lap Timing - Saved Tracks

- Saved tracks will be named by the PDR as custom.gpx.
- Saved tracks can be renamed by placing the SD card in a computer and overwriting the time/date name to a user-friendly name. Do not change or delete the file extension (.gpx).

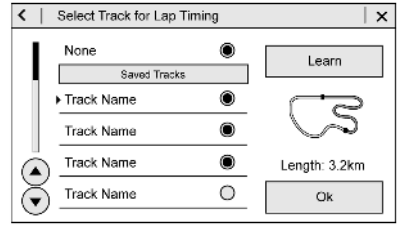

To begin timing an existing track, scroll to the desired track and select OK. The PDR tab will be displayed.

Recordings

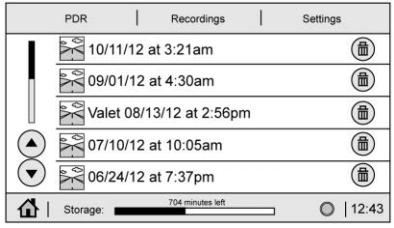

Touch the Recordings tab. The recordings will be displayed with the most recent on top. Select the recording to start playback.

Recordings may be deleted by selecting the trash can. Select yes to delete or no to cancel.

Video Playback is not allowed while the vehicle is moving.

Tap on the screen while the video is playing to display the video playback controls.

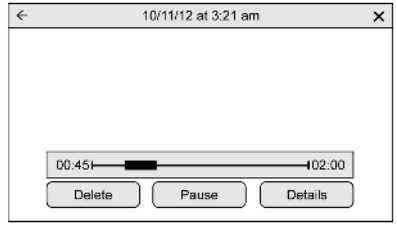

Video Scrubber : Changes the position and playback. The length of the bar corresponds to the time of the video. Advance or rewind the video by dragging along the bar.

Settings

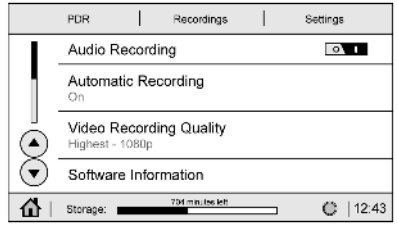

Touch the Settings tab to view the Settings menu.

- Audio Recording - Select on or off to record audio with the recorded video.
- Automatic Recording - When on, the PDR will automatically begin recording whenever the vehicle is in the Run Power Mode. Configurations include:
  - Automatic Recording Video Quality
  - While in Valet Mode only
  - Whether to allow recording overwrite when the storage is full
- Video Quality - Low (480p), or High (1080p). Higher quality will result in larger recording files.
- Software Information - Displays PDR Software Information and Version numbers.
- SD Card Information - Size, Remaining Memory, Format, and Speed.

Toolbox

See www.chevrolet.com/performance-data-recorder to download Toolbox Software.

Phone

Bluetooth (Overview)

The Bluetooth-capable system can be paired with up to 10 Bluetooth devices and two active Bluetooth devices, allowing:

- Placement and receipt of calls in a hands-free mode.
- Sharing of the device's address book or contact list with the vehicle.

To minimize driver distraction, before driving, and with the vehicle parked:

- Become familiar with the features of the mobile device. Organize the phone book and contact lists clearly and delete duplicate or rarely used entries.
  If possible, program speed dial or other shortcuts.
- Review the controls and operation of the infotainment system.
- Pair mobile device(s) to the vehicle. The system may not work with all mobile devices. See "Pairing" later in this section.

Vehicles with a Bluetooth system can use a Bluetooth-capable mobile device with a Hands-Free Profile to make and receive phone calls. The infotainment system and voice recognition are used to control the system. The system can be used while the ignition is on or in accessory mode. The range of the Bluetooth system can be up to 9.1 m (30 ft). Not all mobile devices support all functions and not all mobile devices work with the Bluetooth system. Visit your brand website for more information about compatible mobile devices. See *Online Account* ⇨ *321*.

Controls

Use the controls on the center stack and the steering wheel to operate the Bluetooth system.

Steering Wheel Controls

: Press to answer incoming calls and start voice recognition on your connected Bluetooth mobile device.

: Press to end a call, decline a call, or cancel an operation. Press to mute or unmute the infotainment system when not on a call.

Infotainment System Controls

For information about how to navigate the menu system using the infotainment controls, see *Overview* ⇨ *109*.

Audio System

When using the Bluetooth mobile device system, sound comes through the vehicle's front audio system speakers and overrides the audio system. The volume level while on a mobile device call can be adjusted by pressing the steering wheel controls or the volume control on the center stack. The adjusted volume level remains in memory for later calls. The volume cannot be lowered beyond a certain level.

Bluetooth (Pairing and Using a Phone)

Pairing

A Bluetooth-enabled mobile device must be paired to the Bluetooth system and then connected to the vehicle before it can be used. See the mobile device manufacturer's user guide for Bluetooth functions before pairing the device.

Pairing Information

- If no mobile device has been connected, the Phone main page on the infotainment display will show the Connect Phone option. Touch this option to connect.

Another way to connect is to touch the Phones tab at the top right of the display and then touch Add Phone.

- A Bluetooth smartphone with music capability can be paired to the vehicle as a smartphone and a music player at the same time.
- Up to 10 devices can be paired to the Bluetooth system.
- The pairing process is disabled when the vehicle is moving.
- Pairing only needs to be completed once, unless the pairing information on the cell phone changes or the cell phone is deleted from the system.
- If multiple paired cell phones are within range of the system, the system connects to the paired cell phone that is set to First to Connect. If there is no cell phone set to First to Connect, it will link to the cell phone which was used last. To link to a different paired cell phone, see "Linking to a Different Phone" later in this section.

Near Field Communication (NFC)

If equipped, Near Field Communication (NFC) allows compatible smartphones to be paired to the infotainment system. To begin the pairing process:

1. Refer to the smartphone's user manual to verify it is NFC-compatible.
2. Unlock the smartphone.
3. Enable NFC on the smartphone if it is disabled. The NFC icon should be in the status bar of the smartphone.
4. Hold the smartphone 2.54 cm (1 in) or less from the NFC sensor located above the infotainment screen. See *Instrument Panel Overview* ⇨ *4*.
5. Once pairing begins, a pop-up message with a six-digit code will appear on the smartphone and the infotainment display.
6. Select Yes on the smartphone to confirm the pairing process. A chime will sound when pairing begins.

Multiple smartphones can be paired using this technology.

Functionality varies by model and region. Full functionality requires compatible Bluetooth and smartphone, as well as USB connectivity for some devices.

Pairing a Phone

1. Make sure Bluetooth has been enabled on the cell phone before the pairing process is started.
2. Touch the Phone icon on the Home Page or the phone icon on the shortcut tray near the bottom of the display.
3. Touch Phones at the top of the infotainment display. There is also a Connect Phones option in the middle of the Phone display which will shortcut to the Phone List menu.
4. Touch Add Phone.
5. Select the vehicle name shown on the infotainment display from your cell phone's Bluetooth Settings list.
6. Follow the instructions on the cell phone to confirm the six-digit code showing on the infotainment display and touch Pair. The code on the cell phone and infotainment display will need to be acknowledged for a successful pair.

7. Start the pairing process on the cell phone to be paired to the vehicle. See the cell phone manufacturer's user guide for information on this process. Once the cell phone is paired, it will show under Connected.
8. If the vehicle name does not appear on your cell phone, there are a few ways to start the pairing process over:
   - Turn the cell phone off and then back on.
   - Go back to the beginning of the Phone menus on the infotainment display and restart the pairing process.
   - Reset the cell phone, but this step should be done as a last effort.
9. If the cell phone prompts to accept connection or allow phone book download, touch Always Accept and Allow. The phone book may not be available if not accepted.
10. Repeat Steps 1–8 to pair additional cell phones.

First to Connect Paired Phones

If multiple paired cell phones are within range of the system, the system connects to the paired cell phone that is set as First to Connect. To enable a paired cell phone as the First to Connect phone:

1. Make sure the cell phone is turned on.
2. Touch Settings, then touch System.
3. Touch Phones to access all paired and all connected cell phones and mobile devices.
4. Touch the information icon or pencil icon to the right of the cell phone to open the cell phone's settings menu.
5. Touch the First to Connect option, to enable the setting for that device.

Cell phones and mobile devices can be added, removed, connected, and disconnected. A sub-menu will display whenever a request is made to add or manage cell phones and mobile devices.

Secondary Phone

A cell phone can be enabled as a Secondary Phone by touching the information icon to the right of the paired cell phone name to open the phone settings menu. If a cell phone is enabled as a Secondary Phone, it can connect simultaneously alongside another Bluetooth mobile device. In doing so, the Secondary Phone will be labeled as Incoming Calls. This means the mobile device can only receive calls. The Address Book of a Secondary Phone will not be available and hands-free outgoing calls cannot be placed using this cell phone.

If needed, touch the Secondary Phone while in the Phones list to swap it into the Outgoing and Incoming role. This role makes it possible to place outgoing calls from the Contacts and Recents list.

Listing All Paired and Connected Phones

1. Touch the Phone icon on the Home Page or the phone icon on the shortcut tray near the bottom of the display.
2. Touch Phones.

Disconnecting a Connected Phone

1. Touch the Phone icon on the Home Page.
2. Touch Phones.
3. Touch the information icon or the pencil icon next to the connected cell phone or mobile device to show the cell phone's or mobile device's information display.
4. Touch Disconnect.

Deleting a Paired Phone

1. Touch the Phone icon on the Home Page or the phone icon on the shortcut tray near the bottom of the display.
2. Touch Phones.
3. Touch the information icon or the pencil icon next to the connected cell phone to display the cell phone's or mobile device's information display.
4. Touch Forget Device.

Linking to a Different Phone

To link to a different cell phone, the new cell phone must be in the vehicle and paired to the Bluetooth system.

1. Touch the Phone icon on the Home Page or the phone icon on the shortcut tray near the bottom of the display.
2. Touch Phones.
3. Touch the new cell phone to link to from the not connected phone list. See "First to Connect Paired Phones" and "Secondary Phone" previously in this section.

Switching to Handset or Handsfree Mode

To switch between handset or handsfree mode:

- While the active call is hands-free, touch the Handset option to switch to the handset mode.

  The mute icon will not be available or functional while Handset mode is active.
- While the active call is on the handset, touch the Handset option to switch to the hands-free mode.

Making a Call Using Contacts and Recent Calls

Calls can be made through the Bluetooth system using personal cell phone contact information for all cell phones that support the Phone Book feature. Become familiar with the cell phone settings and operation. Verify the cell phone supports this feature.

The Contacts menu accesses the phone book stored in the cell phone.

The Recents menu accesses the recents call list from your cell phone.

To make a call using the Contacts menu:

1. Touch the Phone icon on the Home Page.
2. Touch Contacts.
3. The Contacts list can be searched by using the first character. Touch A-Z on the infotainment display to scroll through the list of names.

   Touch the name to call.
4. Touch the desired contact number to call.

To make a call using the Recents menu:

1. Touch Phone on the Home Page.
2. Touch Recents.
3. Touch the name or number to call.

Making a Call Using the Keypad

To make a call by dialing the numbers:

1. Touch the Phone icon on the Home Page.
2. Touch Keypad and enter a phone number.
3. Touch on the infotainment display to start dialing the number.

Searching Contacts Using the Keypad

To search for contacts using the keypad:

1. Touch the Phone icon on the Home Page.

2. Touch Keypad and enter partial phone numbers or contact names using the digits on the keypad to search.

   Results will show on the right side of the display. Touch one to place a call.

Accepting or Declining a Call

When an incoming call is received, the infotainment system mutes and a ring tone is heard in the vehicle.

Accepting a Call

There are two ways to accept a call:

- Press on the steering wheel controls.
- Touch Answer on the infotainment display.

Declining a Call

There are two ways to decline a call:

- Press on the steering wheel controls.
- Touch Ignore on the infotainment display.

Call Waiting

Call waiting must be supported on the Bluetooth cell phone and enabled by the wireless service carrier to work.

Accepting a Call

Press to answer, then touch Switch on the infotainment display.

Declining a Call

Press to decline, then touch Ignore on the infotainment display

Switching Between Calls (Call Waiting Calls Only)

To switch between calls, touch Phone on the Home Page to display Call View. While in Call View, touch the call information of the call on hold to change calls.

Three-Way Calling

Three-way calling must be supported on the Bluetooth cell phone and enabled by the wireless service carrier to work.

To start a three-way call while in a current call:

1. In the Call View, touch Add Call to add another call.
2. Initiate the second call by selecting from Recents, Contacts, or Keypad.
3. When the second call is active, touch the merge icon to conference the three-way call together.

Ending a Call

- Press on the steering wheel controls.
- Touch on the infotainment display, next to a call, to end only that call.

Dual Tone Multi-Frequency (DTMF) Tones

The in-vehicle Bluetooth system can send numbers during a call. This is used when calling a menu-driven phone system. Use the Keypad to enter the number.

Apple CarPlay and Android Auto

If equipped, Android Auto and/or Apple CarPlay capability may be available through a compatible smartphone. If available, the Android Auto and Apple CarPlay icons will change from gray to color on the Home Page of the infotainment display.

To use Android Auto and/or Apple CarPlay:

For Wired Phone Projection

1. Download the Android Auto app to your smartphone from the Google Play store. There is no app required for Apple CarPlay.
2. Connect your Android phone or Apple iPhone by using the factory-provided phone USB cable and plugging into a

USB data port. For best performance, it is highly recommended to use the device's factory-provided USB cable, which should be replaced after significant wear to maintain connection quality. Aftermarket or third-party cables may not work.

3. When the phone is first connected to activate Apple CarPlay or Android Auto, accept the terms and conditions on both the infotainment system and the phone.
4. Follow the instructions on the phone.

The Android Auto and Apple CarPlay icons on the Home Page will illuminate depending on the smartphone. Android Auto and/or Apple CarPlay may automatically launch upon USB connection. If not, touch the Android Auto or Apple CarPlay icon on the Home Page to launch.

Press ⌂ on the center stack to return to the Home Page.

For Wireless Phone Projection

Verify your phone is wireless compatible by visiting the Google Android Auto or Apple CarPlay support page.

1. Download the Android Auto app to your smartphone from the Google Play store. There is no app required for Apple CarPlay.
2. For first time connection, there are two ways to set up wireless projection:
   - Connect your Android phone or Apple iPhone by using the factory-provided phone USB cable and plugging into a USB data port. For best performance, it is highly recommended to use the device's factory-provided USB cable, which should be replaced after significant wear to maintain connection quality. Aftermarket or third-party cables may not work.
   - Connecting the phone over Bluetooth. See *Bluetooth (Overview)* ⇨ *144* or *Bluetooth (Pairing and Using a Phone)* ⇨ *144*.
3. Make sure wireless is turned on the phone for wireless projection to work.
4. When the phone is first connected to activate Apple CarPlay or Android Auto, agree to the terms and conditions on both the infotainment system and the phone.
5. Follow the instructions on the phone.

The Android Auto and Apple CarPlay icons on the Home Page will illuminate depending on the smartphone. Android Auto and/or Apple CarPlay may automatically launch upon wireless connection. If not, touch the Android Auto or Apple CarPlay icon on the Home Page to launch.

Wireless Carplay and/or Wireless Android Auto may experience occasional service disruption due to outside Wi-Fi interference.

To disconnect the phones wireless projection:

1. Select Settings from the Home Page.
2. Select Phones
3. Touch ℹ next to the phone to be disconnected.
4. Turn off Apple CarPlay or Android Auto.

Press ⌂ on the center stack to return to the Home Page.

Features are subject to change. For further information on how to set up Android Auto and Apple CarPlay in the vehicle, see my.chevrolet.com.

Android Auto is provided by Google and is subject to Google's terms and privacy policy. Apple CarPlay is provided by Apple and is subject to Apple's terms and privacy policy.

Data plan rates apply. For Android Auto support and to see if your phone is compatible, see https://support.google.com/androidauto. For Apple CarPlay support and to see if your phone is compatible, see www.apple.com/ios/carplay/. Apple or Google may change or suspend availability at any time. Android Auto, Android, Google, Google Play, and other marks are trademarks of Google Inc.; Apple CarPlay is a trademark of Apple Inc.

Press ⌂ on the center stack to exit Android Auto or Apple CarPlay. To enter back into Android Auto or Apple CarPlay, press and hold ⌂ on the center stack.

Apple CarPlay and Android Auto can be disabled from the infotainment system. To do this, touch Home, Settings, and then touch the Apps tab along the top of the display. Use the On/Off toggled to turn off Apple CarPlay or Android Auto.

Settings

Certain settings can be managed in the Online Account site when an account is established, and may be modified if other users have accessed the vehicle or created accounts. This may result in changes to the security or functionality of the infotainment system. Some settings may also be transferred to a new vehicle, if equipped. For instructions, in the U.S. see my.chevrolet.com or in Canada see mychevrolet.ca or monchevrolet.ca.

Refer to the User Terms and Privacy Statement for important details. To view, touch the Settings icon on the Home Page of the infotainment display.

The settings menu may be organized into four categories. Select the desired category by touching System, Apps, Vehicle, or Personal.

To access the personalization menus:

1. Touch Settings on the Home Page on the infotainment display.
2. Touch the desired category to display a list of available options.
3. Touch to select the desired feature setting.
4. Touch the options on the infotainment display to disable or enable a feature.
5. Touch ✕ to go to the top level of the Settings menu.

System

The menu may contain the following:

Time / Date

Allows setting of the clock.

Language

Sets the display language used on the infotainment display. It may also use the selected language for voice recognition and audio feedback.

Phones

Allows connecting to a different cell phone or mobile device source, disconnect a cell phone or media device, or delete a cell phone or media device.

Wi-Fi Networks

Shows connected and available Wi-Fi networks.

If a 4G LTE data package is not active on the vehicle, the infotainment system can be connected to an external protected Wi-Fi network, such as a mobile device or home hotspot, to utilize connected services.

Wi-Fi Hotspot

Allows adjustment of different Wi-Fi features.

Privacy

Allows adjustment of the infotainment privacy settings.

Display

Allows adjustment of the infotainment display.

Sounds

Allows adjustment of the infotainment system sounds.

Voice

Allows adjustment of the infotainment voice recognition features.

Favorites

Allows adjustment of the infotainment favorite settings.

Updates

If equipped, the vehicle can download and install select software updates over a wireless connection. The system will prompt for certain updates to be downloaded and installed. There is also an option to check for updates manually.

To manually check for updates, touch Settings on the Home Page and select the System tab. Go to the Vehicle Software section and touch Updates. Follow the on-screen prompts. The steps to check for, download, and install updates may vary by vehicle.

The vehicle can be used normally during the software download. Once the download is complete, there may be a prompt to accept the installation of the update upon the next ignition cycle or the next time the vehicle is shifted into P (Park). For most updates, the vehicle will be disabled and cannot be driven during the installation. The system will deliver messages indicating success or error during and after the download and installation processes.

Downloading Over-the-Air vehicle software updates requires Internet connectivity, which can be accessed through the vehicle's built-in 4G LTE connection, if equipped and active. If required, data plans are provided by a third party. Optionally, a secure Wi-Fi hotspot such as a compatible mobile device hotspot, home hotspot, or public hotspot can be used. Applicable data rates may apply.

To connect the infotainment system to a secured mobile device hotspot, home hotspot, or public hotspot, touch Settings on the Home Page, select the System tab, followed by Wi-Fi Networks. Select the appropriate Wi-Fi network, and follow the on-screen prompts. Download speeds may vary.

On most compatible mobile devices, activation of the Wi-Fi hotspot is in the Settings menu under Mobile Network Sharing, Personal Hotspot, Mobile Hotspot, or similar.

Availability of Over-the-Air software updates varies by vehicle and country. Features are subject to change. For more information on this feature, see *Online Account* ⇨ *321* for details.

Preferences

Allows the infotainment system to disable or enable the download of new updates in the background.

About

Shows the infotainment system software information.

Running Applications

Shows a complete list of applications that are currently running on the infotainment system.

Return to Factory Settings

Allows resetting the infotainment system settings in the vehicle.

Apps

The menu may contain the following:

Android Auto

Allows interacting directly with a mobile device on the infotainment display. See *Apple CarPlay and Android Auto* ⇨ *148*.

Apple CarPlay

This feature allows you to interact directly with your mobile device on the infotainment display. See *Apple CarPlay and Android Auto* ⇨ *148*.

Apps

Shows app settings and information.

Audio

Adjusts different audio settings.

Climate

Adjusts different climate settings.

Navigation

Adjusts different navigation settings.

See *Using the Navigation System* ⇨ *122*.

Phone

Adjusts different phone settings.

Vehicle

The menu may contain the following:

Buckle to Drive

This feature can prevent shifting out of Park when the driver, and if applicable the front passenger, seat belt is not buckled. See *Buckle To Drive* ⇨ *45*.

Driver Mode Customization

See "Driver Mode Customization" in *Driver Mode Control* ⇨ *208*.

Climate and Air Quality

Adjusts different climate settings.

Collision/Detection Systems

Adjusts different driver assistance system settings.

Comfort and Convenience

Adjusts different comfort and convenience settings.

Lighting

Adjusts different lighting settings.

Power Door Locks

Adjusts different door lock settings.

Remote Lock, Unlock, and Start

Adjusts different remote lock settings.

Ride Height

See *Front Lift System* ⇨ *214*.

Seating Position

Adjusts different seat settings.

Teen Driver

See *Teen Driver* ⇨ *153*.

Valet Mode

This will lock the infotainment system and steering wheel controls. It may also limit access to vehicle storage locations, if equipped.

To enable valet mode:

1. Enter a four-digit code on the keypad.
2. Select Enter to go to the confirmation screen.
3. Re-enter the four-digit code.

Touch Lock or Unlock to lock or unlock the system. Touch Back to go back to the previous menu.

To configure the Performance Data Recorder (PDR) to automatically record in Valet mode, see "Settings" in *Performance Data Recorder (PDR)* ⇨ *138*.

Personal

If equipped, this menu allows adjustment of different user profile settings. See "Users" in *Using the System* ⇨ *112* for information on setting up user profiles.

The menu may contain the following:

Name

Touch to edit your user name that will be displayed in the vehicle.

Vehicle Account Information

Touch to view the vehicle account information and to change the account password.

An "unverified user account" pop-up will display until the account information verification process has been completed on the Internet. Check your registered e-mail account for an activation e-mail to complete the verification process.

Profile Picture

Touch to choose or change your profile picture.

Profile Identifiers

Touch to have the vehicle recognize the identifier you choose.

Touch Vehicle Key 1 and/or Vehicle Key 2.

If the remote key is lost or stolen, see your dealer.

Security

Touch to have your profile secured with a PIN.

Touch No or Yes.

Vehicle Name

Touch to edit your vehicle name.

Vehicle Account

Touch to view the vehicle account information and to change the account password.

Delete Profile

Touch to remove the profile from the vehicle.

Touch Remove or Cancel.

Teen Driver

If equipped, this allows multiple keys to be registered for beginner drivers to encourage safe driving habits. When the vehicle is started with a Teen Driver key, it will automatically activate certain safety systems, allow setting of some features, and limit the use of others. The Report Card will record vehicle data about driving behavior that can be viewed later. When the vehicle is started with a registered key, the Driver Information Center (DIC) displays a message that Teen Driver is active.

To access:

1. Touch Settings on the Home Page, then touch Vehicle, and then Teen Driver.
2. Create a Personal Identification Number (PIN) by choosing a four-digit PIN. Re-enter the PIN to confirm. To change the PIN, touch Change PIN.

The PIN is required to:

- Set up/Add or remove keys.
- Change Teen Driver settings.
- Change or clear the Teen Driver PIN.
- Access or delete Report Card data.

Set up/Add keys to activate Teen Driver and assign restrictions to the key:

Any vehicle key can be registered, up to a maximum of eight keys. Label the key to tell it apart from the other keys.

For a pushbutton start system:

1. Start the vehicle.
2. For automatic transmissions, the vehicle must be in P (Park). For manual transmissions, the vehicle must be stopped with the parking brake set.
3. From the Settings menu, touch Vehicle and then Teen Driver.
4. Enter the PIN.
5. Place the remote key you wish to register in the transmitter pocket. The key does not need to be the one that started the vehicle. See *Remote Key Operation* ⇨ 7 for transmitter pocket location.
6. From the Teen Driver menu, touch Setup Keys or Add/Remove Teen Driver Keys.
   - If the remote key has not previously been registered, the option to add the key displays. Touch Add and a confirmation message displays. Teen Driver restrictions will be applied whenever this remote key is used to operate the vehicle.
   - If the remote key has already been registered, the option to remove the key displays. If Remove is touched, the remote key is no longer registered. A confirmation message displays, and Teen Driver restrictions will not be applied if this remote key is used to operate the vehicle.

In vehicles with a pushbutton start system, if a Teen Driver and a non-Teen Driver key are both present at start up, the vehicle will recognize the non-Teen Driver key to start the vehicle. The Teen Driver settings will not be active.

For a keyed ignition system:

1. Start the vehicle.
2. For automatic transmissions, the vehicle must be in P (Park). For manual transmissions, the vehicle must be stopped with the parking brake set.
3. From the Settings menu, touch Vehicle and then Teen Driver.
4. Enter the PIN.
5. Touch Setup Keys or Add/Remove Teen Driver Keys. The system displays instructions for registering or unregistering a key. A confirmation message displays.

Manage Settings or Teen Driver Settings

Depending on the options of your vehicle, the following menu items may be displayed:

Buckle to Drive : When turned ON, Buckle to Drive prevents the driver from shifting out of P (Park) for a period of time after the brake pedal is pressed if the driver, or on some vehicles the detected passenger, has not buckled their seat belt. On some vehicles, Buckle to Drive is always ON when Teen Driver is active and is not configurable. See *Buckle To Drive* ⇨ *45*.

Audio Volume Limit : Allows a maximum audio volume to be set. Turn the audio volume limit on or off. Use the arrows to choose the maximum allowable level for the audio volume. On some infotainment systems, touch Set Audio Volume Limit to choose the maximum allowable audio volume level.

Set Audio Volume Limit : Use the arrows to choose the maximum allowable level for the audio volume.

Teen Driver Speed Limiter : Limits the maximum speed of the vehicle. When the speed limiter is turned on and the vehicle is started with a Teen Driver key, the DIC displays a message that the top speed is limited.

On certain vehicles, when the Speed Limiter is turned ON, the vehicle's maximum acceleration will be limited. The DIC will display a message that the acceleration is limited.

Teen Driver Speed Warning : Displays a warning in the DIC when exceeding a selectable speed. Turn the speed warning on or off and choose the desired speed warning level. The speed warning does not limit the speed of the vehicle. On some infotainment systems, touch Set Teen Driver Speed Warning to set the warning speed.

Set Teen Driver Speed Warning : Choose the desired speed warning level. The speed warning does not limit the speed of the vehicle.

SiriusXM Explicit Content Filter : Allows the SiriusXM Explicit Content Filter to be turned ON or OFF. When ON, the teen driver will not be able to listen to SiriusXM stations that contain explicit content, and the Explicit Content Filter selection in the Audio Settings will be unavailable for change.

When Teen Driver is Active:

- If equipped, the radio will mute when the driver seat belt, and in some vehicles the front passenger seat belt, is not buckled. The audio from any device paired to the vehicle will also be muted.
- An object placed on the front passenger seat, such as a briefcase, handbag, grocery bag, laptop, or other electronic device, could cause the passenger sensing system to falsely sense an unbuckled front passenger and mute the radio. If this happens, remove the object from the seat. See *Passenger Sensing System* ⇨ *56*.
- Some safety systems, such as Automatic Emergency Braking, if equipped, cannot be turned off.
- The gap setting for Adaptive Cruise Control and alert timing for Forward Collision Alert, if equipped, cannot be changed.
- When trying to change a safety feature that is not configurable in Teen Driver, the feature may be grayed out or removed from the infotainment menu, or the DIC will display a message indicating that Teen Driver is active and the action is not available.
- Super Cruise, if equipped, is not available.
- Enhanced Low Fuel Warning (if equipped) – When the vehicle is low on fuel, the low fuel light on the instrument cluster flashes and the DIC low fuel warning cannot be dismissed.
- Do not tow a trailer if equipped with Automatic Emergency Braking.

Report Card

The vehicle owner must secure the driver's consent to record certain vehicle data when the vehicle is driven with a registered Teen Driver key. There is one Report Card per vehicle. Data is only recorded when a registered Teen Driver key is used to operate the vehicle.

The Report Card data is collected from the time Teen Driver is activated or the last time the Report Card was reset. The following items may be recorded:

- Distance Driven – the total distance driven.
- Maximum Speed – the maximum vehicle speed detected.

- Overspeed Warnings – the number of times the speed warning setting was exceeded.
- Wide Open Throttle – the number of times the accelerator pedal was pressed nearly all the way down.
- Forward Collision Alerts (if equipped) – the number of times the driver was notified when approaching a vehicle ahead too quickly and at potential risk for a crash.
- Forward Automatic Braking, also called Automatic Emergency Braking (if equipped) – the number of times the vehicle detected that a forward collision was imminent and applied the brakes.
- Reverse Automatic Braking (if equipped) – the number of times the vehicle detected that a rearward collision was imminent and applied the brakes.
- Traction Control – the number of times the Traction Control System activated to reduce wheel spin or loss of traction.
- Stability Control – the number of events which required the use of electronic stability control.
- Antilock Braking System Active – The number of Antilock Brake System activations.
- Tailgating Alerts (if equipped) – the number of times the driver was alerted for following a vehicle ahead too closely.

Report Card Data

Cumulative Data is saved for all trips until the Report Card is reset or until the maximum count is exceeded. If the maximum count is exceeded for a Report Card line item, that item will no longer be updated in the Report Card until it is reset. Each item will report a maximum of 1,000 counts. The distance driven will report a maximum of 64 374 km (40,000 mi).

To delete Report Card data, do one of the following:

- From the Report Card display, touch Reset.
- Touch Clear PIN and All Teen Driver Keys from the Teen Driver menu. This will also unregister any Teen Driver keys and delete the PIN.

Forgotten PIN

See your dealer to reset the PIN.

Trademarks and License Agreements

FCC Information

See *Radio Frequency Statement* ⇨ *327*.

"Made for iPhone," means that an electronic accessory has been designed to connect specifically to iPhone, and has been certified by the developer to meet Apple performance standards. Apple is not responsible for the operation of this device or its compliance with safety and regulatory standards. Please note that the use of this accessory with iPhone may affect wireless performance. iPhone are trademarks of Apple Inc., registered in the U.S. and other countries.

If you decide to continue service after your trial, your selected subscription plan will automatically renew thereafter. You will be charged at then-current rates. Fees and taxes apply. Please see the SiriusXM Customer Agreement at siriusxm.com for complete terms and how to cancel, which includes calling SiriusXM at 1-866-635-2349. All fees and programming are subject to change.

Fees and Taxes: Subscription fee, taxes, one time activation fee, and other fees may apply. Subscription fee is consumer only. All fees and programming subject to change. Subscriptions subject to Customer Agreement available at www.siriusxm.com. SiriusXM service is only available in the 48 contiguous United States and Canada.

In Canada: Some deterioration of service may occur in extreme northern latitudes. This is beyond the control of SiriusXM Satellite Radio.

Explicit Language Notice: Channels with frequent explicit language are indicated with an “XL” preceding the channel name. Channel blocking is available for SiriusXM Satellite Radio receivers by notifying SiriusXM:

- USA Customers — See www.siriusxm.com or call 1-888-601–6296.
- Canada Customers — See www.siriusxm.ca or call 1-877-438-9677.

It is prohibited to copy, decompile, disassemble, reverse engineer, hack, manipulate, or otherwise make available any technology or software incorporated in receivers compatible with the SiriusXM Satellite Radio System or that support the SiriusXM website, the Online Service or any of its content. Furthermore, the AMBER voice compression software included in this product is protected by intellectual property rights including patent rights, copyrights, and trade secrets of Digital Voice Systems, Inc.

General Requirements:

1. A License Agreement from SiriusXM is required for any product that incorporates SiriusXM Technology and/or for use of any of the SiriusXM marks to be manufactured, distributed, or marketed in the SiriusXM Service Area.
2. For products to be distributed, marketed, and/or sold in Canada, a separate agreement is required with Canadian Satellite Radio Inc. (operating as SiriusXM Canada).

TouchSense Technology and TouchSense System 1000 Series Licensed from Immersion Corporation. TouchSense System 1000 protected under one or more of the U.S. Patents at the following address www.immersion.com/patent-marking.html and other patents pending.

Bose

Bose AudioPilot and Bose Centerpoint surround are registered trademarks of Bose Corporation in the U.S. and other countries.

HD Radio Technology

HD Radio Technology manufactured under license from iBiquity Digital Corporation. U.S. and Foreign Patents. For patents see https://dts.com/patents. HD Radio and the HD, HD Radio, and "ARC" logos are registered trademarks or trademarks of iBiquity Digital Corporation in the United States and/or other countries.

Bluetooth

The Bluetooth word mark and logos are owned by the Bluetooth SIG, Inc. and any use of such marks by General Motors is under license. Other trademarks and trade names are those of their respective owners.

Java

Java is a registered trademark of Oracle and/or its affiliates.

MPEG4–AVC (H.264)

THIS PRODUCT IS LICENSED UNDER THE AVC PATENT PORTFOLIO LICENSE FOR THE PERSONAL AND NON-COMMERCIAL USE OF A CONSUMER TO (i) ENCODE VIDEO IN COMPLIANCE WITH THE AVC STANDARD ("AVC VIDEO") AND/OR (ii) DECODE AVC VIDEO THAT WAS ENCODED BY A CONSUMER ENGAGED IN A PERSONAL AND NON-COMMERCIAL ACTIVITY AND/OR WAS OBTAINED FROM A VIDEO PROVIDER LICENSED TO PROVIDE AVC VIDEO. NO LICENSE IS GRANTED OR SHALL BE IMPLIED FOR ANY OTHER USE. ADDITIONAL INFORMATION MAY BE OBTAINED FROM MPEG LA, LLC. SEE HTTPS://WWW.MPEGLA.COM.

VC-1

THIS PRODUCT IS LICENSED UNDER THE VC-1 PATENT PORTFOLIO LICENSE FOR THE PERSONAL AND NON-COMMERCIAL USE OF A CONSUMER TO (i) ENCODE VIDEO IN COMPLIANCE WITH THE VC-1 STANDARD ("VC-1 VIDEO") AND/OR (ii) DECODE VC-1 VIDEO THAT WAS ENCODED BY A CONSUMER ENGAGED IN A PERSONAL AND NON-COMMERCIAL ACTIVITY AND/OR WAS OBTAINED FROM A VIDEO PROVIDER LICENSED TO PROVIDE VC-1 VIDEO. NO LICENSE IS GRANTED OR SHALL BE IMPLIED FOR ANY OTHER USE. ADDITIONAL INFORMATION MAY BE OBTAINED FROM MPEG LA, LLC. SEE HTTPS://WWW.MPEGLA.COM.

MPEG4–Visual

USE OF THIS PRODUCT IN ANY MANNER THAT COMPLIES WITH THE MPEG-4 VISUAL STANDARD IS PROHIBITED, EXCEPT FOR USE BY A CONSUMER ENGAGING IN PERSONAL AND NON-COMMERCIAL ACTIVITIES.

MP3

MPEG Layer-3 audio coding technology licensed from Fraunhofer IIS and Thomson.

WMV/WMA

This product includes technology owned by Microsoft Corporation and under a license from Microsoft Licensing, GP. Use or distribution of such technology outside of this product is prohibited without a license from Microsoft Corporation and/or Microsoft Licensing, GP as applicable.

Map End User License Agreement

END USER TERMS

The Map Data SD card ("Data") is provided for your personal, internal use only and not for resale. It is protected by copyright, and is subject to the following terms (this "End User License Agreement") and conditions which are agreed to by you, on the one hand, and HERE North America, LLC ("HERE") and its licensors (including their licensors and suppliers) on the other hand.

The Data for areas of Canada includes information taken with permission from Canadian authorities, including: © Her Majesty the Queen in Right of Canada, © Queen's Printer for Ontario, © Canada Post Corporation, GeoBase®.

HERE holds a nonexclusive license from the United States Postal Service® to publish and sell ZIP+4® information.

© United States Postal Service 2013. Prices are not established, controlled, or approved by the United States Postal Service. The following trademarks and registrations are owned by the USPS: United States Postal Service, USPS, and ZIP+4.

TERMS AND CONDITIONS

Personal Use Only: You agree to use this Data for the solely personal, noncommercial purposes for which you were licensed, and not for service bureau, timesharing or other similar purposes. Except as otherwise set forth herein, you agree not to otherwise reproduce, copy, modify, decompile, disassemble or reverse engineer any portion of this Data, and may not transfer or distribute it in any form, for any purpose, except to the extent permitted by mandatory laws. You may transfer the Data and all accompanying materials on a permanent basis if you retain no copies and the recipient agrees to the terms of this End User License Agreement. Multi-disc sets may only be transferred or sold as a complete set as provided to you and not as a subset thereof.

Restrictions

Except where you have been specifically licensed to do so by HERE and without limiting the preceding paragraph, you may not (a) use this Data with any products, systems, or applications installed or otherwise connected to or in communication with vehicles capable of vehicle navigation, positioning, dispatch, real time route guidance, fleet management or similar applications; or (b) with, or in communication with, including without limitation, cellular phones, palmtop and handheld computers, pagers, and personal digital assistants or PDAs.

Warning

This Data may contain inaccurate or incomplete information due to the passage of time, changing circumstances, sources used, and the nature of collecting comprehensive geographic data, any of which may lead to incorrect results.

No Warranty

This Data is provided to you "as is," and you agree to use it at your own risk. HERE and its licensors (and their licensors and suppliers) make no guarantees, representations, or warranties of any kind, express or implied, arising by law or otherwise, including but not limited to, content, quality, accuracy, completeness, effectiveness, reliability, fitness for a particular purpose, usefulness, use or results to be obtained from this Data, or that the Data or server will be uninterrupted or error free.

Disclaimer of Warranty

THE DATABASE IS PROVIDED ON AN "AS IS" AND "WITH ALL FAULTS BASIS" AND HARMAN (AND THEIR LICENSORS AND SUPPLIERS) EXPRESSLY DISCLAIM ALL OTHER WARRANTIES, EXPRESS OR IMPLIED, INCLUDING BUT NOT LIMITED TO, THE IMPLIED WARRANTIES OF NON-INFRINGEMENT, MERCHANTABILITY, SATISFACTORY QUALITY, ACCURACY, TITLE AND FITNESS FOR A PARTICULAR PURPOSE. NO ORAL OR WRITTEN ADVICE OR INFORMATION PROVIDED BY HARMAN (OR ANY OF THEIR LICENSORS, AGENTS, EMPLOYEES, OR THIRD PARTY PROVIDERS) SHALL CREATE A WARRANTY, AND YOU ARE NOT ENTITLED TO RELY ON ANY SUCH ADVICE OR INFORMATION. THIS DISCLAIMER OF WARRANTIES IS AN ESSENTIAL CONDITION OF THIS AGREEMENT.

Disclaimer of Liability

HERE AND ITS LICENSORS (INCLUDING THEIR LICENSORS AND SUPPLIERS) SHALL NOT BE LIABLE TO YOU IN RESPECT OF ANY CLAIM, DEMAND OR ACTION, IRRESPECTIVE OF THE NATURE OF THE CAUSE OF THE CLAIM, DEMAND OR ACTION ALLEGING ANY LOSS, INJURY OR DAMAGES, DIRECT OR INDIRECT, WHICH MAY RESULT FROM THE USE OR POSSESSION OF THIS DATA; OR FOR ANY LOSS OF PROFIT, REVENUE, CONTRACTS OR SAVINGS, OR ANY OTHER DIRECT, INDIRECT, INCIDENTAL, SPECIAL OR CONSEQUENTIAL DAMAGES ARISING OUT OF YOUR USE OF OR INABILITY TO USE THIS DATA, ANY DEFECT IN THIS DATA, OR THE BREACH OF THESE TERMS OR CONDITIONS, WHETHER IN AN ACTION IN CONTRACT OR TORT OR BASED ON A WARRANTY, EVEN IF HERE OR ITS LICENSORS HAVE BEEN ADVISED OF THE POSSIBILITY OF SUCH DAMAGES. Some States, Territories, and Countries do not allow certain liability exclusions or damages limitations, so to that extent the above may not apply to you.

Export Control

You agree not to export from anywhere any part of the Data provided to you or any direct product thereof except in compliance with, and with all licenses and approvals required under, applicable export laws, rules and regulations. Entire Agreement: These terms and conditions constitute the entire agreement between HERE (and its licensors, including their licensors and suppliers) and you pertaining to the subject matter hereof, and supersedes in their entirety any and all written or oral agreements previously existing between us with respect to such subject matter.

Governing Law

The above terms and conditions shall be governed by the laws of the State of Illinois, without giving effect to (i) its conflict of laws provisions, or (ii) the United Nations Convention for Contracts for the International Sale of Goods, which is explicitly excluded. You agree to submit to the jurisdiction of the State of Illinois for any and all disputes, claims, and actions arising from or in connection with the Data provided to you hereunder.

Government End Users

If the Data is being acquired by or on behalf of the United States government or any other entity seeking or applying rights similar to those customarily claimed by the United States government, this Data is a "commercial item" as that term is defined at 48 C.F.R. ("FAR") 2.101, is licensed in accordance with this End User License Agreement, and each copy of Data delivered or otherwise furnished shall be marked and embedded as appropriate with the following "Notice of Use," and be treated in accordance with such Notice:

Maps for Life

NOTICE OF USE

CONTRACTOR (MANUFACTURER/ SUPPLIER)

NAME:

HERE North America, LLC

CONTRACTOR (MANUFACTURER/SUPPLIER)

ADDRESS:

425 West Randolph Street, Chicago, IL 60606.

This Data is a commercial item as defined in FAR 2.101 and is subject to the End User License Agreement under which this Data was provided.

© 2014 HERE North America, LLC. All rights reserved.

If the Contracting Officer, federal government agency, or any federal official refuses to use the legend provided herein, the Contracting Officer, federal government agency, or any federal official must notify HERE prior to seeking additional or alternative rights in the Data.

Unicode

Copyright © 1991-2010 Unicode, Inc. All rights reserved. Distributed under the Terms of Use in https://www.unicode.org/copyright.html.

Free Type Project

Portions of this software are copyright © 2010 The FreeType Project (https://www.freetype.org). All rights reserved.

Open Source SW

Further information concerning the OSS licenses is shown in the infotainment display.

QNX

Portions of this software are copyright © 2008-2011, QNX Software Systems. All rights reserved.

Part C – EULA

Copyright © 2011, Software Systems GmbH & Co. KG. All Rights Reserved.

The product you have purchased ("Product") contains Software (Runtime Configuration No. 505962; "Software") which is distributed by or on behalf of the Product manufacturer "Manufacturer") under license from Software Systems Co. ("QSSC"). You may only use the Software in the Product and in compliance with the license terms below.

Subject to the terms and conditions of this License, QSSC hereby grants you a limited, non-exclusive, non-transferable license to use the Software in the Product for the purpose intended by the Manufacturer. If permitted by the Manufacturer, or by applicable law, you may make one backup copy of the Software as part of the Product software. QSSC and its licensors reserve all license+C31 rights not expressly granted herein, and retain all right, title and interest in and to all copies of the Software, including all intellectual property rights therein. Unless required by applicable law you may not reproduce, distribute or transfer, or de-compile, disassemble or otherwise attempt to unbundle, reverse engineer, modify or create derivative works of, the Software. You agree: (1) not to remove, cover or alter any proprietary notices, labels or marks in or on the Software, and to ensure that all copies bear any notice

contained on the original; and (2) not to export the Product or the Software in contravention of applicable export control laws.

EXCEPT TO THE EXTENT OTHERWISE REQUIRED BY APPLICABLE LAW, QSSC AND ITS LICENSORS PROVIDE THE SOFTWARE ON AN "AS IS" BASIS, WITHOUT WARRANTIES OR CONDITIONS OF ANY KIND, EITHER EXPRESS OR IMPLIED INCLUDING, WITHOUT LIMITATION, ANY WARRANTIES OR CONDITIONS OF TITLE, NON-INFRINGEMENT, MERCHANTABILITY OR FITNESS FOR A PARTICULAR PURPOSE. ANY WARRANTIES OR OTHER PROVISIONS OFFERED BY THE MANUFACTURER OR ITS DISTRIBUTOR(S) THAT DIFFER FROM THIS LICENSE ARE OFFERED BY THE MANUFACTURER OR ITS DISTRIBUTOR(S) ALONE AND NOT BY QSSC, ITS AFFILIATES OR THEIR LICENSORS. YOU ASSUME ANY RISKS ASSOCIATED WITH YOUR USE OF THE SOFTWARE UNDER THIS LICENSE.

EXCEPT TO THE EXTENT OTHERWISE REQUIRED BY APPLICABLE LAW (SUCH AS IN THE CASE OF DELIBERATE OR GROSSLY NEGLIGENT ACTS), IN NO EVENT SHALL QSSC, ITS AFFILIATES OR THEIR LICENSORS BE LIABLE TO YOU UNDER ANY LEGAL THEORY, WHETHER IN TORT (INCLUDING NEGLIGENCE), CONTRACT OR OTHERWISE, FOR DAMAGES, INCLUDING ANY DIRECT, INDIRECT, SPECIAL, INCIDENTAL, OR CONSEQUENTIAL DAMAGES OF ANY CHARACTER ARISING AS A RESULT OF THIS LICENSE OR OUT OF THE USE OR INABILITY TO USE THE PRODUCT (INCLUDING BUT NOT LIMITED TO DAMAGES FOR LOSS OF GOODWILL, WORK STOPPAGE, PRODUCT FAILURE OR MALFUNCTION, OR ANY AND ALL OTHER COMMERCIAL DAMAGES OR LOSSES), EVEN IF QSSC, ITS AFFILIATES OR THEIR LICENSORS HAVE BEEN ADVISED OF THE POSSIBILITY OF SUCH DAMAGES.

WMA

This product is protected by certain intellectual property rights of Microsoft. Use or distribution of such technology outside of this product is prohibited without a license from Microsoft.

For more information on the Software, including any open source software license terms (and available source code) as well as copyright attributions applicable to the Runtime Configuration indicated above, please contact the Manufacturer or contact QSSC at 175 Terence Matthews Crescent, Kanata, Ontario, Canada K2M 1W8 (licensing@qnx.com).

Linotype

Helvetica is a trademark of Linotype Corp. registered in the U.S. Patent and Trademark Office and may be registered in certain other jurisdictions in the name of Linotype Corp. or its licensee Linotype GmbH.

Usage in text form of each of the Licensed Trademarks is:

The trademark attribution requirements for the Licensed Trademarks may be viewed at https://www.linotype.com/2061-19414/trademarks.html.

END USER NOTICE

The marks of companies displayed by this product to indicate business locations are the marks of their respective owners. The use of such marks in this product does not imply any sponsorship, approval, or endorsement by such companies of this product.

Climate Controls

Climate Control Systems
Dual Automatic Climate Control System 163

Air Vents
Air Vents 166

Maintenance
Passenger Compartment Air Filter 166
Service 167

Climate Control Systems

Dual Automatic Climate Control System

The heating, cooling, and ventilation in the vehicle can be controlled with this system.

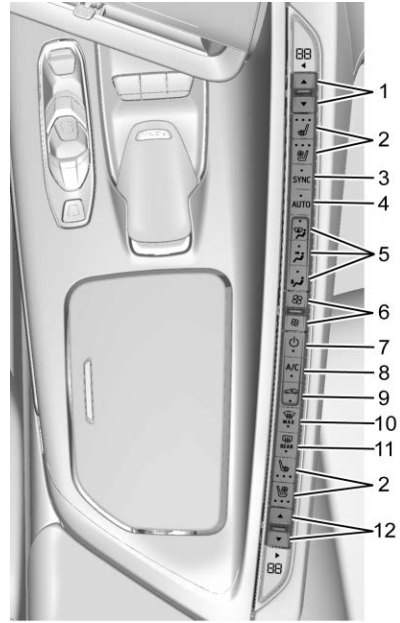

1. Driver Temperature Control
2. Driver and Passenger Heated and Ventilated Seats (If Equipped)

3. SYNC (Synchronized Temperature)
4. AUTO (Automatic Operation)
5. Air Delivery Mode Controls
6. Fan Control
7. ⏻ (Power)
8. A/C (Air Conditioning)
9. Recirculation
10. Defrost
11. Rear Window Defogger
12. Passenger Temperature Control

Climate Control Display

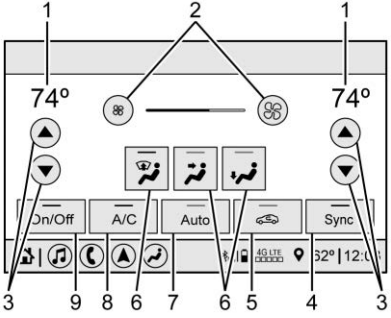

1. Driver and Passenger Temperature Settings
2. Fan Control
3. Driver and Passenger Temperature Controls
4. Sync (Synchronized Temperature)
5. Recirculation
6. Air Delivery Mode Controls
7. Auto (Automatic Operation)
8. A/C (Air Conditioning)
9. On/Off (Power)

The fan, air delivery mode, air conditioning, driver and passenger temperatures, and Sync settings can be controlled by touching CLIMATE on the infotainment Home Page or the climate button in the climate control display application tray. A selection can then be made on the front climate control page displayed. See the infotainment manual.

Climate Control Status Display

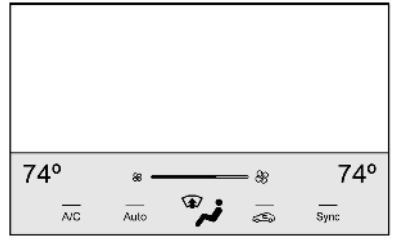

The climate control status display appears briefly when the center stack climate controls are adjusted.

Automatic Operation

The system automatically controls the fan speed, air delivery, air conditioning, and recirculation to heat or cool the vehicle to the desired temperature:

When AUTO is pressed, all four functions operate automatically. Each function can also be manually set and the setting is displayed. Functions not manually set will continue to be automatically controlled, even if the AUTO indicator is not lit.

For automatic operation:

1. Press AUTO.
2. Set the temperature. Allow the system time to stabilize. Adjust the temperature as needed for best comfort.

Manual Operation

: Press to turn the fan off or on.

or : Press to increase or decrease the fan speed.

Driver and Passenger Temperature Controls : The temperature can be adjusted separately for the driver and passenger.

SYNC : Press to link the passenger temperature setting to the driver setting. The SYNC indicator light will turn on. When the passenger setting is adjusted, the SYNC indicator light will turn off.

Air Delivery Mode Control : Press , , or to change the direction of the airflow. Any combination of the three controls can be selected. An indicator light comes on in the selected mode button.

Changing the mode cancels the automatic operation and the system goes into manual mode. Press AUTO to return to automatic operation.

To change the current mode, select one or more of the following:

: Air is directed to the A/C outlets.

: Air is directed to the floor outlets, with some air directed to the windshield, and side window outlets.

: Air is directed to the windshield and side window outlets.

MAX : Air is directed to the windshield and the fan runs at a higher speed if not already above a medium fan speed. This mode overrides the previous mode selected and clears fog or frost from the windshield more quickly. When the control is pressed again, the system returns to the previous mode setting and fan speed.

For best results, clear all snow and ice from the windshield before defrosting.

: Press to turn on recirculation. An indicator light comes on. Air is recirculated to quickly cool the inside of the vehicle. It can also be used to help reduce outside air and odors that enter the vehicle.

Avoid using recirculation for long periods of time in cold or damp conditions. Using recirculation in cold or damp conditions can result in window fogging.

A/C : Press to turn the air conditioning on or off. An indicator light comes on to show that the air conditioning is enabled. If the fan is turned off, the air conditioner will not run. The A/C light will stay on even if the outside temperatures are below freezing. If the A/C is turned off, the air temperature coming through the climate control system may be warmer than the ambient temperature. It is recommended to use auto climate control to maintain comfort.

Rear Window Defogger

REAR : If equipped, press to turn the rear window defogger on or off. An indicator light on the button comes on to show that the rear window defogger is on.

The rear window defogger only works when the engine is running. The defogger can be turned off by turning the vehicle off or to accessory mode.

If equipped with heated outside mirrors, press REAR to turn them on or off. See *Heated Mirrors* ⇨ *25*.

Caution

Using a razor blade or sharp object to clear the inside rear window can damage the rear window defogger. Repairs would not be covered by the vehicle warranty. Do not clear the inside rear window with sharp objects.

Remote Start Climate Control Operation : If equipped with remote start, the climate control system may run when the vehicle is started remotely. If equipped with heated or ventilated seats or a heated steering wheel, these features may come on during a remote start. See *Remote Vehicle Start* ⇨ *12*, *Heated and Ventilated Front Seats* ⇨ *43*, and *Heated Steering Wheel* ⇨ *73*.

Afterblow Feature

If equipped, under certain conditions, the fan may stay on or may turn on and off several times after you turn off and lock the vehicle. This is normal.

Air Vents

Use the tab on the air outlets to change the direction of the airflow or shut the outlet.

Operation Tips

- Clear away any ice, snow, or leaves from the air inlets at the base of the windshield that may block the flow of air into the vehicle.
- Clear snow off the hood to improve visibility and help decrease moisture drawn into the vehicle.
- Use of non-GM approved hood deflectors may adversely affect the performance of the system.
- Keep the areas around the base of the infotainment display and under the seats clear to optimize air circulation.

Maintenance

Passenger Compartment Air Filter

The passenger compartment air filter reduces dust, pollen, and other airborne irritants from outside air that are pulled into the vehicle. Reductions in airflow, which may occur more often in dusty areas, indicate that the filter may need to be replaced. See *Maintenance Schedule* ⇨ *306*.

Caution

Driving without a passenger compartment air filter in place can cause water and small particles, like paper and leaves, to be pulled into your climate control system which may cause damage to it. Make sure you always replace the old filter with a new one.

The passenger compartment air filter is located under the hood between the battery and windshield. See *Underhood Compartment Overview* ⇨ *234*.

To check or replace the air filter:

1. Release the four clips for the left and right outer covers.

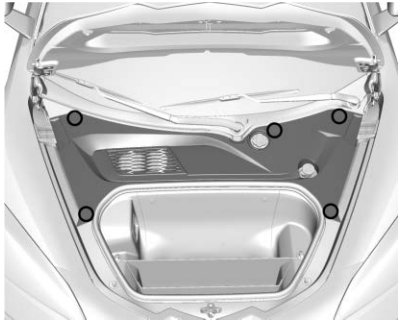

2. Release the five clips and remove the outer cover.

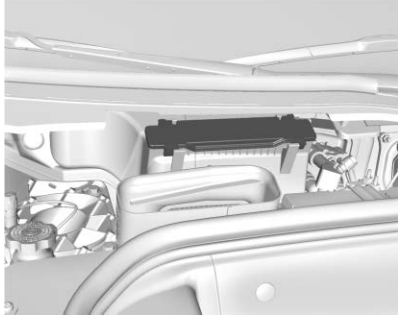

3. Press two push tabs on the top and on the bottom of the cabin air filter cover and remove the cover.
4. Remove the air filter.
5. Install the new air filter and cover.
6. Install the outer cover.
7. Install the right and left outer covers.

Service

All vehicles have a label underhood that identifies the refrigerant used in the vehicle. The refrigerant system should only be serviced by trained and certified technicians. The air conditioning evaporator should never be repaired or replaced by one from a salvage vehicle. It should only be replaced by a new evaporator to ensure proper and safe operation.

During service, all refrigerants should be reclaimed with proper equipment. Venting refrigerants directly to the atmosphere is harmful to the environment and may also create unsafe conditions based on inhalation, combustion, frostbite, or other health-based concerns.

The air conditioning system requires periodic maintenance. See *Maintenance Schedule* ⇨ *306*.

Driving and Operating

Driving Information
Driving for Better Fuel Economy 169
Distracted Driving 169
Defensive Driving 170
Impaired Driving 170
Control of a Vehicle 170
Braking 170
Steering 170
Off-Road Recovery 171
Loss of Control 172
Track Events and Competitive Driving 172
Driving on Wet Roads 183
Hill and Mountain Roads 184
Winter Driving 184
If the Vehicle Is Stuck 185
Vehicle Load Limits 186

Starting and Operating
New Vehicle Break-In 189
Front Air Dam (and Splitter) 189
Composite Materials 189
Ignition Positions 190
Starting the Engine 191
Retained Accessory Power (RAP) 192
Shifting Into Park 193
Shifting out of Park 193
Parking over Things That Burn 194
Active Fuel Management 194
Extended Parking 194

Engine Exhaust
Engine Exhaust 194
Running the Vehicle While Parked 195

Dual Clutch Transmission
Dual Clutch Transmission 195
Manual Mode 198

Brakes
Electric Brake Boost 203
Antilock Brake System (ABS) 204
Electric Parking Brake 204
Brake Assist 205
Hill Start Assist (HSA) 205

Ride Control Systems
Traction Control/Electronic Stability Control 206
Hill Rollback Control 208
Driver Mode Control 208
Front Lift System 214
Competitive Driving Mode 215
Limited-Slip Differential (Stingray Models Without Z51 Performance Package) 218
Limited-Slip Differential (Stingray With Z51 Performance Package and Z06 model) 219

Cruise Control
Cruise Control 219

Driver Assistance Systems
Driver Assistance Systems 221
Assistance Systems for Parking or Backing 223
Rear Vision Camera (RVC) 223
Curb View Camera 224
Park Assist 225
Rear Cross Traffic Alert (RCTA) System 225
Side Blind Zone Alert (SBZA) 225

Fuel
Top Tier Fuel 227
Recommended Fuel 227
Prohibited Fuels 227
Fuels in Foreign Countries 228
Fuel Additives 228
Filling the Tank 228
Filling a Portable Fuel Container 229

Trailer Towing
General Towing Information 230

Conversions and Add-Ons
Add-On Electrical Equipment 230

Driving Information

Driving for Better Fuel Economy

Driving habits can affect fuel mileage. Here are some driving tips to get the best fuel economy possible:

- Set the climate controls to the desired temperature after the engine is started, or turn them off when not required.
- Avoid fast starts and accelerate smoothly.
- Brake gradually and avoid abrupt stops.
- Avoid idling the engine for long periods of time.
- When road and weather conditions are appropriate, use cruise control.
- Always follow posted speed limits or drive more slowly when conditions require.
- Keep vehicle tires properly inflated.
- Combine several trips into a single trip.
- Replace the vehicle's tires with the same TPC Spec number molded into the tire's sidewall near the size.
- Follow recommended scheduled maintenance.
- Using Tour mode rather than Sport or Track modes, will result in better Active Fuel Management operation. See *Active Fuel Management* ⇨ *194*.
- For recommended shift speeds, see *Dual Clutch Transmission* ⇨ *195*.

Premium Fuel

Use the recommended fuel. See *Recommended Fuel* ⇨ *227*.

Distracted Driving

Distraction comes in many forms and can take your focus from the task of driving. Exercise good judgment and do not let other activities divert your attention away from the road. Many local governments have enacted laws regarding driver distraction. Become familiar with the local laws in your area.

To avoid distracted driving, keep your eyes on the road, keep your hands on the steering wheel, and focus your attention on driving.

- Do not use a phone in demanding driving situations. Use a hands-free method to place or receive necessary phone calls.
- Watch the road. Do not read, take notes, or look up information on phones or other electronic devices.
- Designate a front seat passenger to handle potential distractions.
- Become familiar with vehicle features before driving, such as programming favorite radio stations and adjusting climate control and seat settings. Program all trip information into any navigation device prior to driving.
- Wait until the vehicle is parked to retrieve items that have fallen to the floor.
- Stop or park the vehicle to tend to children.
- Keep pets in an appropriate carrier or restraint.
- Avoid stressful conversations while driving, whether with a passenger or on a cell phone.

⚠ Warning

Taking your eyes off the road too long or too often could cause a crash resulting in injury or death. Focus your attention on driving.

Refer to the infotainment section for more information on using that system and the navigation system, if equipped, including pairing and using a cell phone.

Defensive Driving

Defensive driving means "always expect the unexpected." The first step in driving defensively is to wear the seat belt. See *Seat Belts* ⇨ *44*.

- Assume that other road users (pedestrians, bicyclists, and other drivers) are going to be careless and make mistakes. Anticipate what they may do and be ready.
- Allow enough following distance between you and the driver in front of you.
- Focus on the task of driving.

Impaired Driving

Death and injury associated with impaired driving is a global tragedy.

⚠ Warning

Drinking alcohol or taking drugs and then driving is very dangerous. Your reflexes, perceptions, attentiveness, and judgment can be affected by even a small amount of alcohol or drugs. You can have a serious — or even fatal — collision if you drive after drinking or taking drugs.

Do not drive while under the influence of alcohol or drugs, or ride with a driver who has been drinking or is impaired by drugs. Find alternate transportation home; or if you are with a group, designate a driver who will remain sober.

Control of a Vehicle

Braking, steering, and accelerating are important factors in helping to control a vehicle while driving.

Braking

Braking action involves perception time and reaction time. Deciding to push the brake pedal is perception time. Actually doing it is reaction time.

Average driver reaction time is about three-quarters of a second. In that time, a vehicle moving at 100 km/h (60 mph) travels 20 m (66 ft), which could be a lot of distance in an emergency.

Helpful braking tips to keep in mind include:

- Keep enough distance between you and the vehicle in front of you.
- Avoid needless heavy braking.
- Keep pace with traffic.

If the engine ever stops or a brake fault occurs, the brakes may lose power assist. More effort will be required to stop the vehicle. It may take longer to stop.

Steering

Caution

To avoid damage to the steering system, do not drive over curbs, parking barriers, or similar objects at speeds greater than 3 km/h (1 mph). Use care when driving over other objects such as lane dividers and speed bumps. Damage caused by misuse of the vehicle is not covered by the vehicle warranty.

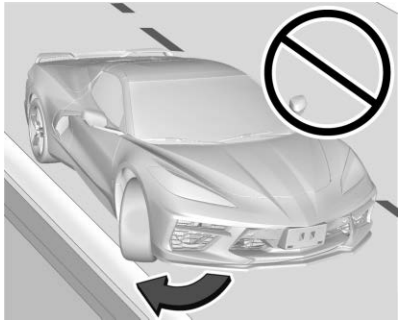

Electric Power Steering

The vehicle is equipped with an electric power steering system, which reduces the amount of effort needed to steer the vehicle. It does not have power steering fluid. Regular maintenance is not required.

If the vehicle experiences a system malfunction and loses power steering, greater steering effort may be required. Power steering assist also may be reduced if you turn the steering wheel as far as it can turn and hold it there with force for an extended period of time.

See your dealer if there is a problem.

Dynamic Rack Travel

Dynamic Rack Travel (DRT) is a steering system feature of Magnetic Ride Control. If equipped, this feature provides additional maximum steering wheel rotation to allow for tighter turns when driving a low speeds. As the vehicle speed increases or if the suspension encounters significant wheel travel, such as a driveway, while at maximum steering rotation, DRT may gently push the steering back a small amount to prevent the front tires from contacting the vehicle. This is normal operation. There is no customer interface or display for this feature. DRT is not available when in Track Mode.

Curve Tips

- Take curves at a reasonable speed.
- Reduce speed before entering a curve.
- Maintain a reasonable and steady speed through the curve.
- Wait until the vehicle is out of the curve before accelerating gently into the straightaway.

Steering in Emergencies

- There are some situations when steering around an obstacle may be more effective than braking.
- Holding both sides of the steering wheel allows you to turn 180 degrees without removing a hand.
- The Antilock Brake System (ABS) allows steering while braking.

Off-Road Recovery

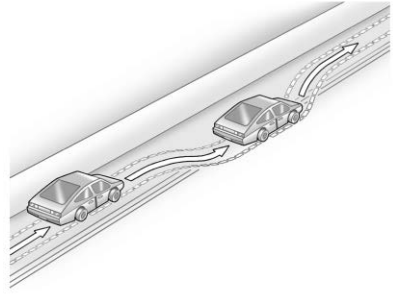

The vehicle's right wheels can drop off the edge of a road onto the shoulder while driving. Follow these tips:

1. Ease off the accelerator and then, if there is nothing in the way, steer the vehicle so that it straddles the edge of the pavement.
2. Turn the steering wheel about one-eighth of a turn, until the right front tire contacts the pavement edge.
3. Turn the steering wheel to go straight down the roadway.

Loss of Control

Skidding

There are three types of skids that correspond to the vehicle's three control systems:

- Braking Skid — wheels are not rolling.
- Steering or Cornering Skid — too much speed or steering in a curve causes tires to slip and lose cornering force.
- Acceleration Skid — too much throttle causes the driving wheels to spin.

Defensive drivers avoid most skids by taking reasonable care suited to existing conditions, and by not overdriving those conditions. But skids are always possible.

If the vehicle starts to slide, follow these suggestions:

- Ease your foot off the accelerator pedal and steer the way you want the vehicle to go. The vehicle may straighten out. Be ready for a second skid if it occurs.
- Slow down and adjust your driving according to weather conditions. Stopping distance can be longer and vehicle control can be affected when traction is reduced by water, snow, ice, gravel, or other material on the road. Learn to recognize warning clues — such as enough water, ice, or packed snow on the road to make a mirrored surface — and slow down when you have any doubt.
- Try to avoid sudden steering, acceleration, or braking, including reducing vehicle speed by shifting to a lower gear. Any sudden changes could cause the tires to slide.

Remember: Antilock brakes help avoid only the braking skid.

Track Events and Competitive Driving

All Z06 models or Stingray models equipped with Z51 performance package can be used for track events and competitive driving. For additional details on vehicle track preparation, see Chevrolet.com > Corvette Experience > Guides > Track Prep Guide.

⚠ Danger

High-performance features are intended for use only on closed tracks by experienced and qualified drivers and should not be used on public roads. High-speed driving, aggressive cornering, hard braking, and other high-performance driving can be dangerous. Improper driver inputs for the conditions may result in loss of control of the vehicle, which could injure or kill you or others. Always drive safely.

Participating in track events or other competitive driving without following the instructions provided may affect the vehicle warranty. See the warranty manual before

using the vehicle for racing or other competitive driving. See *Competitive Driving Mode* ⇨ *215*.

⚠ Warning

Some of the adjustments and procedures specified in this section may require specialized skill, training, and equipment. Failure to perform these procedures properly could cause malfunction, potentially resulting in death, personal injury, or damage to the vehicle or property. Do not attempt to perform these adjustments or procedures unless properly qualified.

Be sure to follow all service procedures before driving the vehicle at track events or competitively. See *New Vehicle Break-In* ⇨ *189*.

⚠ Warning

Prior to each track event and again before returning to public roads, tighten the wheel nuts with a torque wrench to the proper torque specification. Wheel nuts that are improperly or incorrectly (Continued)

Warning (Continued)

tightened can cause the wheels to become loose or come off, resulting in a crash. See *Capacities and Specifications* ⇨ *315* for wheel nut torque specifications.

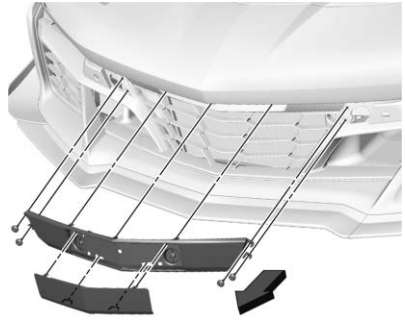

For Z06 vehicles only, remove the front license plate and bracket (if installed) and remove the front aero covers before track use. See your dealer for complete procedure.

Engine Sound Management Setting

Caution

Do not place the vehicle in Engine Sound Management – Stealth mode. Damage could result to exhaust valve actuators.

Engine Oil

Caution

If the vehicle is used for track events and competitive driving, the engine may use more oil than it would with normal use. Low oil levels can damage the engine. Check the oil level often and maintain the proper level. See *Engine Oil (5.5L LT6 Engine)* ⇨ *242* or *Engine Oil (6.2L LT2 Engine)* ⇨ *245*.

Check the oil level often during track events and competitive driving. See “Checking the Engine Oil" in *Engine Oil (5.5L LT6 Engine)* ⇨ *242* or *Engine Oil (6.2L LT2 Engine)* ⇨ *245*.

Engine Cooling

If reduced performance is experienced during track events or competitive driving, turning off the A/C will help to improve engine performance.

Maintain a mixture of 40% DEX-COOL coolant and 60% clean, drinkable water to optimize engine performance.

Fuel

Unleaded gasoline, rated at 93 octane or higher, is required.

Caution

Some high octane fuels contain additives and compounds that may damage the vehicle and void the vehicle warranty. See *Prohibited Fuels* ⇨ *227*.

Dual Clutch Transmission (DCT) Fluid

The transmission fluid and external canister filter should be changed after every 24 hours of track use. Change the fluid and external canister filter as soon as possible if prompted by the transmission fluid life monitor that remaining fluid life is low.

Stingray

Add an additional 2 L (2 qt) of DCT transmission fluid before track use. It is not required to remove the additional 2 L (2 qt) of DCT fluid after the track event.

Any transmission level set or change should be performed at your dealer.

Z06

Additional transmission fluid is not required for the Z06. The Z06 comes track ready from the factory.

Brakes

Battery Disconnect

Disconnect the battery before servicing the hydraulic brake system. It is critical to disconnect the battery before bleeding the system, replacing the pads, or any other work. The battery must be disconnected to prevent the brake master cylinder from pressurizing the hydraulic system during its automated self diagnostic tests that can occur when a door is opened or the remote key is present.

⚠ Warning

To avoid personal injury and/or vehicle damage, always disconnect the battery before performing service work on the hydraulic brake system. Bleeding the brake system with the battery connected can lead to the system diagnosing a leak or air in the braking system. A Diagnostic Trouble Code (DTC) may set and vehicle speed may be limited.

Brake Fluid

Replace existing brake fluid with a qualified high performance DOT 4 brake fluid from a sealed container. Brake fluid with a dry boiling point >310 °C (590 °F) is qualified. If high performance brake fluid is used, replace it with GM approved brake fluid before driving on public roads. If high performance brake fluid is in the vehicle and the age of the brake fluid is over a month old or unknown, replace the brake fluid before track events and competitive driving. Do not use silicone or DOT-5 brake fluids.

Check the fluid level before each competitive driving event.

Brake System Flushing and Bleeding

The J55, J56, and J57 brake systems require specific processes for bleeding and fluid flushing. These can be found in the service manual.

Properly bleeding the brake system is required for proper operation of the hydraulic brake system.

Brake Leak Detection

The hydraulic braking system has advanced diagnostic capability to help detect hydraulic leaks, trapped air, and other performance issues. These diagnostics are active when the hydraulic system is powered. To avoid inadvertently setting a leak DTC, disconnect the battery before servicing the brake system.

If the vehicle sets a DTC related to a brake system leak, the Brake System Warning Light will come on and vehicle speed may be limited to 100 kph (62 mph). Any time a leak DTC is set, the vehicle should be inspected carefully for evidence of a leak and should be repaired immediately. See your dealer.

Brake Fade Warning Assist

The Brake Fade Warning Assist system monitors brake system performance. If the system detects brake fade, or if the brake fluid is near the boiling point, the driver will be alerted.

The Brake Fade Warning Assist system is designed for use with the factory-installed brake pads or GM approved replacement pads. If the brake pads on the vehicle need to be replaced, use GM approved brake pads. If this is not done, the brake fade warning system may not function properly.

Stage 1 : The Driver Information Center (DIC) displays a “Reduce Braking to Avoid Overheating” message, a chime sounds and brake pedal effort and travel is increased. When the message displays, the driver should back up braking points and reduce brake usage in order to reduce brake temperature. This will allow for continued lapping with no speed limitations.

Stage 2 : The Driver Information Center (DIC) displays a “Brakes Overheated Service Now” message, a chime sounds, and brake pedal effort and travel is further increased. This code indicates that the brake fluid temperature is excessive and is about to boil. The system limits vehicle speed to 100KPH/62MPH. The driver should immediately start a cool down lap if on the track. If this message displays, the vehicle needs to be serviced. The brake system needs to cool down, and the brake fluid must be immediately flushed with DOT4 for street use, or to a qualified DOT4 race fluid for track use. Boiled brake fluid is compromised and must be replaced.

Brake Burnishing

Caution
Performing the brake burnish procedure on a base brake system can result in brake damage.

Caution

The new vehicle break-in period should be completed before performing the brake burnish procedure, otherwise damage may occur to the powertrain/engine. See *New Vehicle Break-In* ⇨ *189*.

Caution

Brake pedal fade will occur during any track burnish procedure and can cause brake pedal travel and force to increase. This could extend stopping distance until the brakes are fully burnished.

New brake pads must be burnished before racing or other competitive driving.

When this procedure is performed as instructed, it will not damage the brakes. The brake pads will smoke and produce an odor. The braking force and pedal travel may increase. After the procedure, the brake pads may appear white at the rotor contact.

Perform this procedure only on dry pavement, in a safe manner, and in compliance with all local and state ordinances/laws regarding motor vehicle operation.

Brake Burnishing Procedure for J55 (Stingray with Z51) and J56 (Z06 Standard) Brakes

This brake burnish procedure should only be performed on vehicles with the Z06 with J56, or Z51 with J55 factory equipped brake systems.

1. Using the friction bubble in the Cluster Performance menu, apply the brakes 25 times starting at 100 km/h (60 mph) to 50 km/h (30 mph) while decelerating at 0.4 g. See *Instrument Cluster* ⇨ *79*. This is a medium brake application. Drive for at least 1 km (0.6 mi) between applying the brakes. This first step may be skipped if there are more than 320 km (200 mi) on the brake pads.
2. Apply the brakes 25 times starting at 100 km/h (60 mph) to 25 km/h (15 mph) while decelerating at 0.8 g. This is a hard brake application without activating the Antilock Brake System (ABS). Drive for at least 1 km (0.6 mi) between applications. Depending on conditions, some increase in brake pedal travel and brake pedal force may be experienced.
3. Cool down: Drive at 100 km/h (60 mph) for approximately 15 km (10 mi) without using the brakes.
4. Apply the brakes 25 times from 100 km/h (60 mph) to 50 km/h (30 mph) while decelerating at 0.4 g. This is a medium brake application. Drive for at least 1 km (0.6 mi) between applications.

As with all high performance brake systems, some amount of brake squeal is normal.

Brake Burnishing Procedure for Z06 with Available J57 Carbon Ceramic Brakes

This brake burnish procedure should only be run on Z06 vehicles with J57 factory equipped brake systems.

Perform this procedure only on dry pavement, in a safe manner, and in compliance with all local and state ordinances regarding motor vehicle operation.

1. Using the friction bubble in the Cluster Performance menu, apply the brakes 25 times starting at 100 km/h (60 mph) to 50 km/h (30 mph) while decelerating at 0.4 g. This is a medium brake application. Drive for at least 1.6 km (1.0 mi) between applications. This first step may be skipped if there are more than 320 km (200 mi) on the brake pads.

2. Apply the brakes 20 times starting at 100 km/h (60 mph) to 25 km/h (15 mph) while decelerating at 0.8 g. This is a hard brake application. Drive for at least 1.6 km (1.0 mi) between applications.
3. Apply the brakes 12 times starting at 100 km/h (60 mph) to 8 km/h (5 mph) while decelerating at 0.8 g. This is a hard brake application. Accelerate as rapidly as possible without activating traction control between applications.
4. Cool down: Drive at 100 km/h (60 mph) for approximately 15 km (10 mi) without using the brakes.

As with all high performance brake systems, some amount of brake squeal is normal.

Alternative Closed Course Brake Burnishing Procedure for J55 (Stingray with Z51), J56 (Z06 Standard), and J57 (Z06 Carbon Ceramic) Brakes

This brake burnish procedure should be run on vehicles with the Z51 with J55, Z06 with J56, or Z06 with J57 factory equipped brake systems.

This procedure should only be run on a track and only on dry pavement. Brake pedal fade will occur during this track burnish procedure and can cause brake pedal travel and force to increase. This could extend stopping distance until the brakes are fully burnished.

1. Start track lapping at lower speeds and lower braking efforts for three minutes of driving. Allow for increased braking distances due to reduced brake output.
2. After Step 1, increase speed and braking effort for the next six minutes of lapping, gradually ending up at 90% effort. Continue to allow for increased braking distance due to reduced brake output.
3. Cool the brakes by lapping with minimal light braking for six minutes.

Brake Cooling Kit

Before any track event, high speed driving event, or competitive driving, the following should be completed:

- Ensure all brake cooling parts are correctly and securely installed.
- Install the rear lower control arm cooling ducts per the instructions included with the kit. After any track event or competitive driving, remove the rear lower control arm cooling ducts. These parts are for track use only. Removing the ducts helps prevent debris from being channeled into the rear brakes during regular use of the vehicle.
- Inspect for and remove any blockage in the ducts.
- Inspect and replace any duct that has damage.

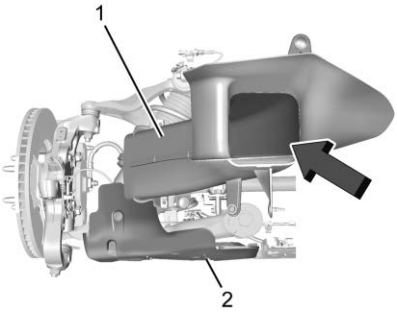

Right Side Front Shown, Left Side Front Similar

1. Front Brake Cooling Duct
2. Front Lower Control Arm Deflector

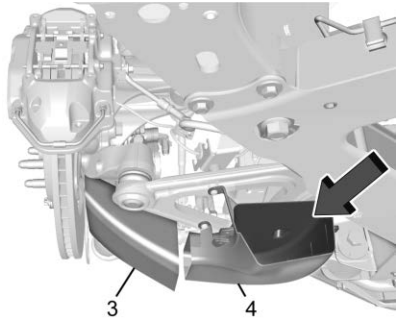

Right Side Rear Shown, Left Side Rear Similar

3. Rear Knuckle Mounted Cooling Duct
4. Rear Lower Control Arm Cooling Duct

Aerodynamics

Underbody Strake Inspection (For Z06 Vehicles With Spoiler Regular Production Options (RPO) TOF or TOG)

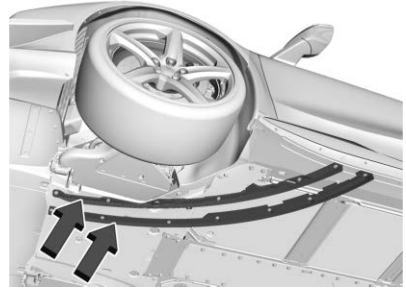

Left Side Shown, Right Side Similar

For optimal aero performance, ensure the front strakes are solidly attached to the underbody and damage free. If not, replace with service parts.

Corvette Z06 Recommended Aerodynamic Configurations

Rear Spoiler With Tall Wickers Shown, Short Wickers Similar

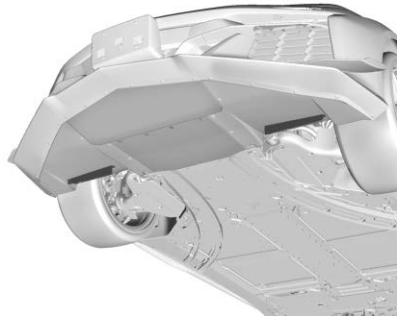

Front Underwing Stall Gurney Flaps

Refer to the following table for setting up the Z06 for optimized aerodynamic performance. Street Driving targets the lowest aerodynamic drag, whereas Track Driving targets optimal downforce balance. Setup will vary based on the vehicle's front splitter, front underwing, and rear spoiler/wing configuration.

RPO Code	Street Driving - Recommended Aerodynamic Configuration		Track Driving - Recommended Aerodynamic Configuration	
	Front	Rear	Front	Rear
Z06	Front underwing stall Gurney flaps installed. Front fascia aero cover installed.	Short rear spoiler wickers installed. No rear lower control arm brake duct.	Remove front underwing stall Gurney flaps. Remove front fascia aero cover.	Install tall rear spoiler wickers. Install rear lower control arm brake duct.
Z06 and CFV/CFZ	Front underwing stall Gurney flaps installed. Front fascia aero cover installed.	Short rear spoiler wickers installed. No rear lower control arm brake duct.	Front underwing stall Gurney flaps installed. Remove front fascia aero cover.	Install tall rear spoiler wickers. Install rear lower control arm brake duct.
Z06 and CFV/CFZ and T0G/T0F	No front underwing stall Gurney flaps. Front fascia aero cover installed.	No rear lower control arm brake duct.	No underwing stall Gurney flaps. Remove front fascia aero cover. Install four underbody strakes.	Install rear lower control arm brake duct.
Z06 and Z07	No front underwing stall Gurney flaps. Front fascia aero cover installed.	No rear lower control arm brake duct.	No underwing stall Gurney flaps. Remove front fascia aero cover. Install four underbody strakes.	Install rear lower control arm brake duct.
Z06 and 5V5	Front underwing stall Gurney flaps installed. Front fascia aero cover installed.	No rear lower control arm brake duct.	Front underwing stall Gurney flaps installed. Remove front fascia aero cover.	Install rear lower control arm brake duct.

Shock Spring Seat Adjustment

The front shocks, on vehicles without hydraulic front lift and rear shocks, have threaded spring seats that allow adjustment of the preload on the coil springs. The vehicle corner weights can be adjusted for track use. If the vehicle trim height is modified, it should be returned to normal trim height before street use.

The spring seat can be adjusted approximately 20 mm (0.8 in) up or down from the nominal position. Each complete turn of the spring seat will change the vehicle height approximately 1.5 mm (0.06 in). When adjusting the seat to the upper limit, lift the dust boot and ensure the seat does not thread off the center support tube (stop adjustment when threads no longer visible). When adjusting the seat to the lower limit, leave approximately 10 mm (0.4 in) of thread visible for the lower lock nut to have full thread engagement.

The following procedure can be complex and should only be performed by trained personnel. See your dealer.

To adjust the lower spring seat:

1. Raise the vehicle so the tires are completely off the ground.

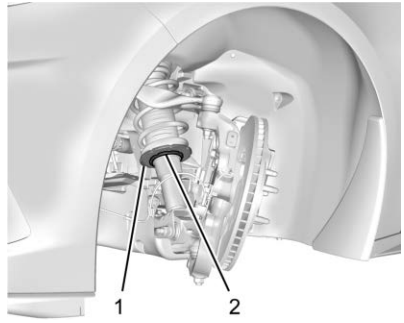

Front Shown, Rear Similar

2. Loosen the lower spring seat lock nut (2).
3. Thread the lower spring seat lock nut (2) downward off of the threads to its resting location on the shoulder of the center support tube.
4. While holding the center support tube holes, turn the spring seat (1) upward to increase spring preload, or downward to decrease spring preload.
5. Thread the lower lock nut (2) back on to the center support tube and torque it against the spring seat (1) to 25 N•m (18.4 lb ft).

Load Limit (Stingray Z51)

Limit vehicle load to the driver only, with no other cargo. Inflate the front tires to 160 kPa (23 psi) and the rear tires to 165 kPa (24 psi). Drive at a maximum speed of 296 km/h (184 mph).

Road Course target hot pressures are 220–240 kPa (32–35 psi). Value will vary based on driving style, track, temperature, and weather conditions. See *Tire Pressure for High-Speed Operation* ⇨ *279* for high speed non-track use.

Load Limit (Z06)

Tracks with Combined High-Speed and High-Load Corners

(e.g., Nurburgring Nordschliefe, Spa Francorchamps, or similar)

Limit the vehicle to the driver and one passenger, with no additional cargo.

Cold Tire Pressure Requirement: Inflate tires to no less than 210 kPa (30 psi) front and rear, cold.

Hot Tire Pressure Target Range:
220 – 240 kPa (32-35 psi).

Road/Street Courses

(e.g., Virginia International Raceway, Road Atlanta, or similar)

Limit the vehicle to the driver and one passenger, with no additional cargo.

Cold Tire Pressure Requirement: Inflate tires to no less than 165 kPa (24 psi) front and rear, cold.

Hot Tire Pressure Target Range:
220 – 240 kPa (32-35 psi).

See *Tire Pressure for High-Speed Operation* ⇨ *279* for high speed non track use.

Wheel Alignment

Caution

Using these wheel alignment settings may cause excessive tire wear. Only use these wheel alignment settings for racing

(Continued)

Caution (Continued)

or competitive driving. Excessive tire wear is not covered under the vehicle warranty.

Caution

Do not use power tools when removing or installing the fasteners. Damage to the threads may occur. Use hand tools only, and do not overtighten. Hand start the fasteners to ensure that the threads do not bind or cross thread.

The racing and competitive driving wheel alignment settings should be set as described here.

Stingray Z51

To achieve the track alignment specified settings:

1. The upper control arm to body washers on all four corners must be moved from between the body and the control arm and relocated between the head of the bolt and the control arm.
2. Adjust the lower control arm cam bolt position to achieve the following specifications:

Front (per corner)

- Caster: +8.0 degrees
- Camber: -3.0 degrees
- Toe (total): 0.1 degrees toe in

Rear (per corner)

- Caster: 0 degrees
- Camber: -2.5 degrees
- Toe (total): 0.1 degrees toe in
- Thrust Angle: 0 degrees

After track use, reinstall washers between the body and the control arms. Reset to factory alignment settings. See your dealer.

Z06

1. The upper control arm washers do not need to be removed for Z06.
2. Adjust the lower control arm cam bolt position to achieve the following specifications:

Front (per corner)

- Caster: +8.0 degrees
- Camber: -2.0 degrees
- Toe (total): 0.1 degrees toe in

Rear (per corner)

- Caster: 0 degrees
- Camber: -2.0 degrees
- Toe (total): 0.1 degrees toe in
- Thrust Angle: 0 degrees

Z06 with Z07 Performance Package Equipped With Carbon Fiber Wheels (RPOs ROY and ROZ)

When participating in Track Events or Competitive Driving with these wheels, a proper cool down without hot soaking the wheels is critical.

- On a typical road course 3.2–6.5 km (2-4 miles) long per lap, one cool down lap without using the brakes will suffice. If the track being driven is shorter than 3.2 km (2 mi), perform two cool down laps without using the brakes.
- If adequate cool down without using the brakes cannot be achieved (i.e., red flag on track, have to stop unexpectedly, etc.), the key is to not have one area of the wheels exposed to the "chimney effect" of the heat that rises off of a stationary hot brake rotor. This can be prevented by very low speed driving of the car such that the entire circumference of the wheel is exposed to the heat. Rolling the car back and forth in a small space is better than sitting still with hot brakes.

Driving on Wet Roads

Rain and wet roads can reduce vehicle traction and affect your ability to stop and accelerate. Always drive slower in these types of driving conditions and avoid driving through large puddles and deep-standing or flowing water.

⚠ Warning

Wet brakes can cause crashes. They might not work as well in a quick stop and could cause pulling to one side. You could lose control of the vehicle.

After driving through a large puddle of water or a car/vehicle wash, lightly apply the brake pedal until the brakes work normally.

Flowing or rushing water creates strong forces. Driving through flowing water could cause the vehicle to be carried away. If this happens, you and other vehicle occupants could drown. Do not

(Continued)

Warning (Continued)

ignore police warnings and be very cautious about trying to drive through flowing water.

Caution

Driving through deep puddles or standing water can cause water to come in through the engine air intake and damage the engine. If deep puddles or standing water cannot be avoided, proceed with caution and do not exceed 8 km/h (5 mph). Do not drive through water that may come close to or cover the vehicle’s underbody.

Hydroplaning

Hydroplaning is dangerous. Water can build up under the vehicle's tires so they actually ride on the water. This can happen if the road is wet enough and you are going fast enough. When the vehicle is hydroplaning, it has little or no contact with the road.

There is no hard and fast rule about hydroplaning. The best advice is to slow down when the road is wet.

Other Rainy Weather Tips

Besides slowing down, other wet weather driving tips include:

- Allow extra following distance.
- Pass with caution.
- Keep windshield wiping equipment in good shape.
- Keep the windshield washer fluid reservoir filled.
- Have good tires with proper tread depth. See *Tires* ⇨ *271*.
- Turn off cruise control.

Hill and Mountain Roads

Driving on steep hills or through mountains is different than driving on flat or rolling terrain. Tips include:

- When driving downhill in D (Drive), the vehicle may automatically downshift to assist with speed control.
- A lower gear may also be selected to provide further speed control.

⚠ Warning

Using the brakes to slow the vehicle on a long downhill slope can cause brake overheating, can reduce brake performance, and could result in a loss of braking. Shift the transmission to a lower gear to let the engine assist the brakes on a steep downhill slope.

⚠ Warning

Coasting downhill in N (Neutral) or with the ignition off is dangerous. This can cause overheating of the brakes and loss of steering assist. Always have the engine running and the vehicle in gear.

- Drive at speeds that keep the vehicle in its own lane. Do not swing wide or cross the center line.
- Be alert on top of hills; something could be in your lane (e.g., stalled car, crash).
- Pay attention to special road signs (e.g., falling rocks area, winding roads, long grades, passing or no-passing zones) and take appropriate action.

Winter Driving

Driving on Snow or Ice

Caution

To avoid damage to the wheels and brake components, always clear snow and ice from inside the wheels and underneath the vehicle before driving.

Snow or ice between the tires and the road creates less traction or grip, so drive carefully. Wet ice can occur at about 0 °C (32 °F) when freezing rain begins to fall. Avoid driving on wet ice or in freezing rain until roads can be treated.

For Slippery Road Driving:

- Accelerate gently. Accelerating too quickly causes the wheels to spin and makes the surface under the tires slick.
- Turn on Traction Control. See *Traction Control/Electronic Stability Control* ⇨ *206*.
- The Antilock Brake System (ABS) improves vehicle stability during hard stops, but the brakes should be applied sooner than when on dry pavement. See *Antilock Brake System (ABS)* ⇨ *204*.

- Allow greater following distance and watch for slippery spots. Icy patches can occur on otherwise clear roads in shaded areas. The surface of a curve or an overpass can remain icy when the surrounding roads are clear. Avoid sudden steering maneuvers and braking while on ice.
- Turn off cruise control.
- Turn on Weather Mode. See *Driver Mode Control* ⇨ *208*.

Cold Weather Mode

In very low temperatures, a cold weather message may display on the Driver Information Center (DIC). The engine speed, transmission shift patterns, and cabin fan speed may operate differently to enable the vehicle to warm up quicker. You can manually override the cabin fan speed in cold weather mode.

Blizzard Conditions

Stop the vehicle in a safe place and signal for help. Stay with the vehicle unless there is help nearby. If possible, use Roadside Assistance. See *Roadside Assistance Program* ⇨ *322*. To get help and keep everyone in the vehicle safe:

- Turn on the hazard warning flashers.
- Tie a red cloth to an outside mirror.

⚠ Warning

Snow can trap engine exhaust under the vehicle. This may cause exhaust gases to get inside. Engine exhaust contains carbon monoxide (CO), which cannot be seen or smelled. It can cause unconsciousness and even death.

If the vehicle is stuck in snow:

- Clear snow from the base of the vehicle, especially any blocking the exhaust pipe.
- Open a window about 5 cm (2 in) on the vehicle side that is away from the wind, to bring in fresh air.
- Fully open the air outlets on or under the instrument panel.
- Adjust the climate control system to circulate the air inside the vehicle and set the fan speed to the highest setting. See “Climate Control Systems.”

For more information about CO, see *Engine Exhaust* ⇨ *194*.

To save fuel, run the engine for short periods to warm the vehicle and then shut the engine off and partially close the window. Moving about to keep warm also helps.

If it takes time for help to arrive, when running the engine, push the accelerator pedal slightly so the engine runs faster than the idle speed. This keeps the battery charged to restart the vehicle and to signal for help with the headlamps. Do this as little as possible, to save fuel.

If the Vehicle Is Stuck

Slowly and cautiously spin the wheels to free the vehicle when stuck in sand, mud, ice, or snow.

If stuck too severely for the traction system to free the vehicle, turn the traction system off and use the rocking method. See *Traction Control/Electronic Stability Control* ⇨ *206*.

⚠ Warning

If the vehicle's tires spin at high speed, they can explode, and you or others could be injured. The vehicle can

(Continued)

Warning (Continued)

overheat, causing an engine compartment fire or other damage. Spin the wheels as little as possible and avoid going above 56 km/h (35 mph).

Rocking the Vehicle to Get it Out

Turn the steering wheel left and right to clear the area around the front wheels. Turn off any traction system. Shift back and forth between R (Reverse) and a low forward gear, spinning the wheels as little as possible. To prevent transmission wear, wait until the wheels stop spinning before shifting gears. Release the accelerator pedal while shifting, and press lightly on the accelerator pedal when the transmission is in gear. Slowly spinning the wheels in the forward and reverse directions causes a rocking motion that could free the vehicle. If that does not get the vehicle out after a few tries, it may need to be towed out. If the vehicle does need to be towed out, see *Transporting a Disabled Vehicle* ⇨ *293*.

Vehicle Load Limits

It is very important to know how much weight the vehicle can carry. This weight is called the vehicle capacity weight and includes the weight of all occupants, cargo, and all nonfactory-installed options. Two labels on the vehicle may show how much weight it may properly carry: the Tire and Loading Information label and the Certification label.

⚠ Warning

Do not load the vehicle any heavier than the Gross Vehicle Weight Rating (GVWR), or either the maximum front or rear Gross Axle Weight Rating (GAWR). This can cause systems to break and change the way the vehicle handles. This could cause loss of control and a crash. Overloading can also reduce stopping performance, damage the tires, and shorten the life of the vehicle.

Tire and Loading Information Label

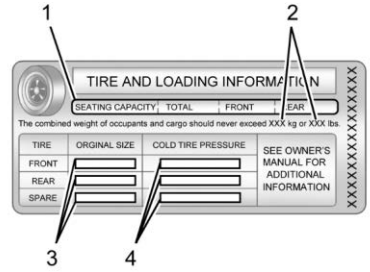

Label Example

A vehicle-specific Tire and Loading Information label is attached to the center pillar (B-pillar). This label shows the number of occupant seating positions (1), and the maximum vehicle capacity weight (2) in kilograms and pounds.

The Tire and Loading Information label also shows the size of the original equipment tires (3) and the recommended cold tire inflation

pressures (4). For more information on tires and inflation see *Tires* ⇨ *271* and *Tire Pressure* ⇨ *278*.

There is also important loading information on the vehicle Certification label. It may show the Gross Vehicle Weight Rating (GVWR) and the Gross Axle Weight Rating (GAWR) for the front and rear axle. See “Certification Label” later in this section.

Steps for Determining Correct Load Limit–

1. Locate the statement "The combined weight of occupants and cargo should never exceed XXX kg or XXX lbs." on your vehicle’s placard.
2. Determine the combined weight of the driver and passengers that will be riding in your vehicle.
3. Subtract the combined weight of the driver and passengers from XXX kg or XXX lbs.
4. The resulting figure equals the available amount of cargo and luggage load capacity. For example, if the "XXX" amount equals 1400 lbs. and there will be five 150 lb passengers in your vehicle, the amount of available cargo and luggage load capacity is 650 lbs. (1400-750 (5 x 150) = 650 lbs.)
5. Determine the combined weight of luggage and cargo being loaded on the vehicle. That weight may not safely exceed the available cargo and luggage load capacity calculated in Step 4.
6. If your vehicle will be towing a trailer, load from your trailer will be transferred to your vehicle. Consult this manual to determine how this reduces the available cargo and luggage load capacity of your vehicle.”

This vehicle is neither designed nor intended to tow a trailer.

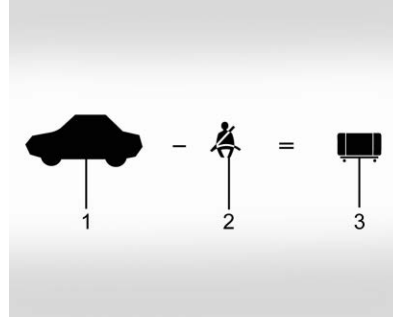

Example 1

1. Vehicle Capacity Weight for Example 1 = 181 kg (400 lbs)
2. Subtract Occupant Weight @ 68 kg (150 lbs) × 1 = 68 kg (150 lbs)
3. Available Occupant and Cargo Weight = 113 kg (250 lbs)

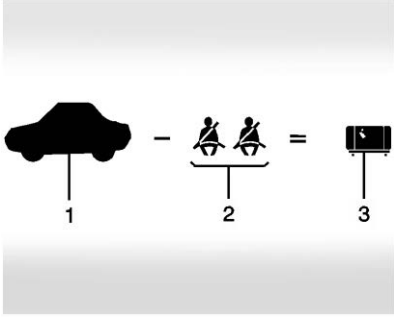

Example 2

1. Vehicle Capacity Weight for Example 2 = 181 kg (400 lbs)
2. Subtract Occupant Weight @ 68 kg (150 lbs) × 2 = 136 kg (300 lbs)
3. Available Cargo Weight = 45 kg (100 lbs)

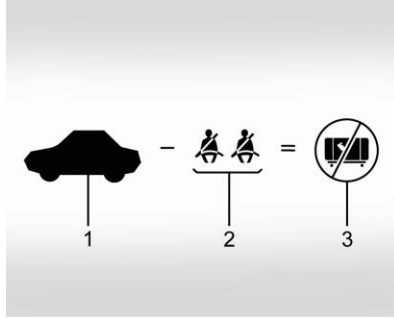

Example 3

1. Vehicle Capacity Weight for Example 3 = 181 kg (400 lbs)
2. Subtract Occupant Weight @ 91 kg (200 lbs) × 2 = 181 kg (400 lbs)
3. Available Cargo Weight = 0 kg (0 lbs)

Refer to the vehicle's Tire and Loading Information label for specific information about the vehicle's capacity weight and seating positions. The combined weight of the driver, passengers and cargo should never exceed the vehicle's capacity weight.

Certification Label

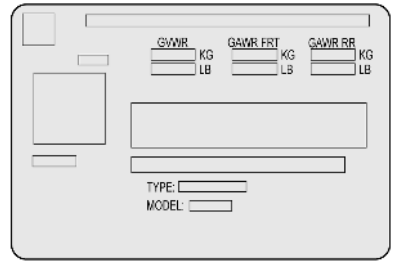

A vehicle-specific Certification label is attached to the rear edge of the driver door. It may show the gross weight capacity of the vehicle, called the Gross Vehicle Weight Rating (GVWR). The GVWR includes the weight of the vehicle, all occupants, fuel and cargo.

Caution
Overloading the vehicle may cause damage. Repairs would not be covered by the vehicle warranty. Do not overload the vehicle.

⚠ Warning

Things you put inside your vehicle can strike and injure people in a sudden stop or turn, or in a crash.

- Put things in the rear area of your vehicle. Try to spread the weight evenly.
- Never stack heavier things, like suitcases, inside the vehicle so that some of them are above the tops of the seats.
- Do not leave an unsecured child restraint in your vehicle.
- When you carry something inside the vehicle, secure it whenever you can.

Starting and Operating

New Vehicle Break-In

Follow these recommended guidelines during the first 2 414 km (1,500 mi) of driving this vehicle. Parts have a break-in period and performance will be better in the long run.

During the first 800 km (500 mi), engine torque will be limited in low gears.

For the first 322 km (200 mi):

- To break in new tires, drive at moderate speeds and avoid hard cornering.
- New brake linings also need a break-in period. Avoid making hard stops. This is recommended every time brake linings are replaced.

For the first 800 km (500 mi):

- Avoid full throttle starts and abrupt stops.
- Do not exceed 4000 rpm.
- Avoid driving at any one constant speed, fast or slow, including the use of cruise control.
- Avoid downshifting to brake or slow the vehicle when the engine speed will exceed 4000 rpm.
- Do not let the engine labor. Never lug the engine. This rule applies at all times, not just during the break-in period.

For the first 2 414 km (1,500 mi):

- Do not participate in track events, sport driving schools, or similar activities.
- Check engine oil with every refueling and add if necessary. Oil and fuel consumption may be higher than normal.

Front Air Dam (and Splitter)

If equipped, the front air dam and splitter have minimal ground clearance.

Under normal operation, the components will occasionally contact some road surfaces (speed bumps, driveway ramps, etc.). This can be heard inside the vehicle as a scraping noise. This is normal and does not indicate a problem.

Use care when approaching bumps or objects on road surfaces and avoid them when possible.

If equipped, the Front Lift System may be used to increase front air dam or splitter clearance. See *Front Lift System* ⇨ *214*.

Composite Materials

This vehicle may be equipped with parts containing carbon fiber, sheet-molding compound, or other composite materials. Dealer-installed accessories may also contain composite materials. These parts and accessories may include the splitter or rocker extensions.

⚠ Warning

Exposed edges of parts containing carbon fiber and other composite materials can be sharp. Contact with these parts could result in injury. Use caution to avoid contacting these parts, including when washing the vehicle. If the parts are damaged, replace the parts promptly with replacements from your dealer.

⚠ Warning

Rocker extensions may break under pressure, resulting in property damage or injury. Do not stand on the rocker extension or use it as a step.

Ignition Positions

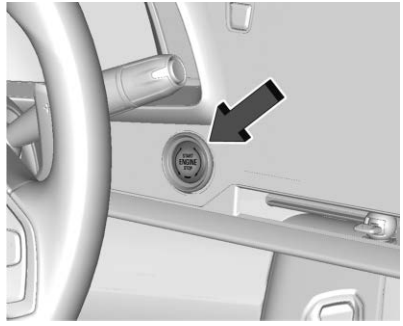

The vehicle has an electronic keyless ignition with pushbutton start.

The remote key must be in the vehicle for the system to operate. If the pushbutton start is not working, the vehicle may be near a strong radio antenna signal causing interference to the Keyless Access system. See *Remote Key Operation* ⇨ 7.

To shift out of P (Park), the vehicle must be turned on and the brake pedal must be applied.

Stopping the Engine/OFF (No Indicator Lights) : When the vehicle is stopped, press ENGINE START/STOP once to turn the engine off.

If the vehicle is in P (Park), the ignition will turn off, and Retained Accessory Power (RAP) will remain active. See *Retained Accessory Power (RAP)* ⇨ 192.

If the vehicle is in R (Reverse), D (Drive), or M (Manual Mode), the vehicle will shift to P (Park), the ignition will turn off, and RAP will remain active.

If the vehicle is in N (Neutral), the ignition will return to accessory and display the message SHIFT TO PARK in the Driver Information Center (DIC). When the vehicle is shifted into P (Park), the ignition will turn off.

Do not turn the engine off when the vehicle is moving. This will cause a loss of power assist in the brake and steering systems and disable the airbags.

If the vehicle must be turned off in an emergency:

1. Brake using a firm and steady pressure. Do not pump the brakes repeatedly. This may deplete power assist, requiring increased brake pedal force.

2. Shift into N (Neutral). This can be done while the vehicle is moving. After shifting into N (Neutral), firmly apply the brakes and steer the vehicle to a safe location.
3. Come to a complete stop. Shift into P (Park).
4. Set the parking brake. See *Electric Parking Brake* ⇨ *204*. Press ENGINE START/STOP to turn the vehicle off.

⚠ Warning

Turning off the vehicle while moving may cause loss of power assist in the brake and steering systems and disable the airbags. While driving, only shut the vehicle off in an emergency.

If the vehicle cannot be pulled over and must be turned off while driving, press and hold ENGINE START/STOP for more than two seconds, or press twice within five seconds.

Accessory (Amber Indicator Light) : This mode allows the use of some electrical accessories when the engine is off.

With the ignition off, pressing the button one time without the brake pedal applied will place the ignition system in accessory.

The ignition will switch from accessory to OFF after five minutes to prevent battery rundown.

ON/RUN/START (Green Indicator Light) : This mode is for driving and starting. With the ignition off and the brake pedal applied, pressing the button once will place the ignition in ON/RUN/START. Once engine cranking begins, release the button. Engine cranking will continue until the engine starts. See *Starting the Engine* ⇨ *191*. The ignition will then remain in ON/RUN.

Service Mode

This power mode is available for service and diagnostics, and to verify the proper operation of the malfunction indicator lamp as may be required for emission inspection purposes. With the vehicle off and the brake pedal not applied, pressing and holding ENGINE START/STOP for more than five seconds will place the vehicle in Service Mode. The instruments and audio systems will operate as they do in ON/RUN, but the vehicle will not be able to be driven. The engine will not start in Service Mode. Press ENGINE START/STOP again to turn the vehicle off.

Starting the Engine

Caution

If you add electrical parts or accessories, you could change the way the engine operates. Any resulting damage would not be covered by the vehicle warranty. See *Add-On Electrical Equipment* ⇨ *230*.

Caution

Do not try to shift to P (Park) if the vehicle is moving. If you do, you could damage the transmission. Shift to P (Park) only when the vehicle is stopped.

Place the transmission in P (Park) or N (Neutral). To restart the vehicle when it is already moving, use N (Neutral) only.

Starting the Vehicle

The remote key must be inside the vehicle for the ignition to work.

Cell phone chargers can interfere with the operation of the Keyless Access system. Battery chargers should not be plugged in when starting or turning off the engine.

1. Press the brake pedal, then press ENGINE START/STOP on the instrument panel.

   If there is no remote key in the vehicle or if there is something causing interference with it, the Driver Information Center (DIC) will display a message.

2. When the engine begins cranking, let go of the button and the engine cranks automatically until it starts.

   If the battery in the remote key is weak, the DIC will display a message. The vehicle can still be driven.

   See "Starting the Vehicle with a Low Remote Key Battery" under *Remote Key Operation* ⇨ 7. If the remote key battery is dead, insert it into the cupholder remote key pocket to enable engine starting.

3. Do not race the engine immediately after starting it. Operate the engine and transmission gently until the oil warms up and lubricates all moving parts.

4. If the engine does not start and no DIC message is displayed, wait 15 seconds before trying again to let the cranking motor cool down.

   If the engine does not start after five to 10 seconds, especially in very cold weather (below −18 °C or 0 °F), it could be flooded with too much gasoline. Try pushing the accelerator pedal all the way to the floor while cranking for up to 15 seconds maximum. Wait at least 15 seconds between each try, to allow the cranking motor to cool down. When the engine starts, let go of the accelerator. If the vehicle starts briefly but then stops again, repeat these steps. This clears the extra gasoline from the engine.

Caution

Cranking the engine for long periods of time, by pressing ENGINE START/STOP immediately after cranking has ended, can overheat and damage the cranking motor, and drain the battery. Wait at least 15 seconds between each try, to let the cranking motor cool down.

Stopping the Engine

Shift to P (Park) and press and hold ENGINE START/STOP on the instrument panel, until the engine shuts off. If the transmission is not in P (Park), the engine shuts off and the vehicle goes into the accessory mode. The DIC displays SHIFT TO PARK. When shifted to P (Park) the vehicle turns off.

If the remote key is not detected inside the vehicle when it is turned off, the DIC displays a message.

Retained Accessory Power (RAP)

When the vehicle is turned from on to off, the following features (if equipped) will continue to function for up to 10 minutes, or until the driver door is opened. These features will also work when the vehicle is on or in accessory mode:

- Infotainment System
- Power Windows (during RAP this functionality will be lost when any door is opened)
- Sunroof (during RAP this functionality will be lost when any door is opened)
- Auxiliary Power Outlet
- Audio System
- OnStar System

Shifting Into Park

⚠ Warning

It is dangerous to get out of the vehicle if the vehicle is not in P (Park) with the parking brake set. The vehicle can roll.

Do not leave the vehicle when the engine is running. If you have left the engine running, the vehicle can move suddenly. You or others could be injured. To be sure the vehicle will not move, even when you are on fairly level ground, always set the parking brake and shift to P (Park).

To shift into P (Park):

1. Hold the brake pedal down and set the parking brake. See *Electric Parking Brake* ⇨ *204*.
2. Press the P (Park) switch on the center console. See *Dual Clutch Transmission* ⇨ *195*.
3. Press ENGINE START/STOP to turn the engine off.

If the vehicle is shifted into P (Park) on a hill, the Electric Parking Brake (EPB) may apply automatically. The EPB may not release when the EPB switch is used. The EPB should automatically release when the vehicle is shifted out of P (Park).

Leaving the Vehicle with the Engine Running

⚠ Warning

It can be dangerous to leave the vehicle with the engine running. It could overheat and catch fire.

It is dangerous to get out of the vehicle if the vehicle is not in P (Park) with the parking brake firmly set. The vehicle can roll.

Do not leave the vehicle when the engine is running. If you have left the engine running, the vehicle can move suddenly. You or others could be injured. To be sure the vehicle will not move, even when you are on fairly level ground, always set the parking brake and shift to P (Park).

If you have to leave the vehicle with the engine running, be sure the vehicle is in P (Park) and the parking brake is set before you leave it.

Shifting out of Park

This vehicle is equipped with an electronically controlled transmission.

If the vehicle has a battery with low voltage, try charging or jump starting the battery. See *Jump Starting - North America* ⇨ *290*.

To shift out of P (Park):

1. Ensure the engine is running.
2. Apply the brake pedal.
3. Press or pull the desired switch on the center console. For N (Neutral) press and hold the N (Neutral) switch until the N indicator illuminates red.

The P indicator will turn white and the gear indicator on the shift switch will turn red when the vehicle is no longer in P (Park).

If equipped, the Buckle to Drive feature may prevent shifting from P (Park). See *Buckle To Drive* ⇨ *45*.

If the vehicle cannot shift from P (Park), a Driver Information Center (DIC) message will display. See your dealer for service.

Parking over Things That Burn

⚠ Warning

Things that can burn could touch hot exhaust parts under the vehicle and ignite. Do not park over papers, leaves, dry grass, or other things that can burn.

Active Fuel Management

This vehicle's engine may be equipped with Active Fuel Management, which allows the engine to operate on either all or half of its cylinders, depending on the driving conditions.

When less power is required, such as cruising at a constant vehicle speed, the system will operate in the half cylinder mode, allowing the vehicle to achieve better fuel economy. When greater power demands are required, such as accelerating from a stop, passing, or merging onto a highway, the system will maintain full-cylinder operation.

If the vehicle has an Active Fuel Management indicator, see Driver Information Center (DIC) for more information on using this display.

Extended Parking

It is best not to park with the vehicle running. If the vehicle is left running, be sure it will not move and there is adequate ventilation.

See *Shifting Into Park* ⇨ *193* and *Engine Exhaust* ⇨ *194*.

If the vehicle is left parked and running with the remote key outside the vehicle, it will continue to run for up to 15 minutes.

If the vehicle is left parked and running with the remote key inside the vehicle, it will continue to run for up to 30 minutes.

The vehicle could turn off sooner if it is parked on a hill, due to lack of available fuel.

The timer will reset if the vehicle is taken out of P (Park) while it is running.

Engine Exhaust

⚠ Warning

Engine exhaust contains carbon monoxide (CO), which cannot be seen or smelled. Exposure to CO can cause unconsciousness and even death.

Exhaust may enter the vehicle if:

- The vehicle idles in areas with poor ventilation (parking garages, tunnels, deep snow that may block underbody airflow or tail pipes).
- The exhaust smells or sounds strange or different.
- The exhaust system leaks due to corrosion or damage.
- The vehicle exhaust system has been modified, damaged, or improperly repaired.
- There are holes or openings in the vehicle body from damage or aftermarket modifications that are not completely sealed.

(Continued)

Warning (Continued)

If unusual fumes are detected or if it is suspected that exhaust is coming into the vehicle:

- Drive it only with the windows completely down.
- Have the vehicle repaired immediately.

Never park the vehicle with the engine running in an enclosed area such as a garage or a building that has no fresh air ventilation.

⚠ Warning

To prevent exhaust gases from entering the vehicle and heat from damaging the vehicle, the engine cover and all fluid fill plugs must be secured before closing the tonneau cover (convertible only) and operating the vehicle. Make sure all bolts are torqued to GM specifications.

Running the Vehicle While Parked

It is better not to park with the engine running.

If the vehicle is left with the engine running, follow the proper steps to be sure the vehicle will not move. See *Shifting Into Park* ⇨ *193* and *Engine Exhaust* ⇨ *194*.

Dual Clutch Transmission

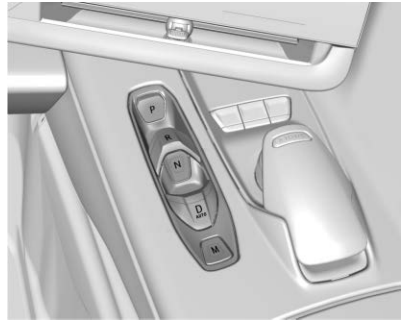

This vehicle is equipped with a dual clutch transmission that contains an integrated rear differential. The dual clutch transmission provides an extremely connected feel due to the direct connection between the engine and gear box. This arrangement provides very fast shift times for maximum performance. Automatic driving mode is selected by pulling D on the transmission range selection panel and provides fully automatic shifting operation which can be further refined using driver mode control. Upshifts may be delayed regardless of mode selection or ambient temperature until the engine is warmed up. Manual operation can also be selected. See Manual Mode later in this section.

This transmission is electronically controlled. The shift switches are on the center console. The selected gear position will illuminate red on the shift switch, while all others will display in white. The indicator on the shift switch may flash if the shift is not immediate or if the gear is not fully engaged. This may occur in very cold conditions or when Double Paddle Declutch is used.

The transmission does not operate when the vehicle is off.

If the vehicle is in accessory mode, the transmission can be shifted into P (Park).

If ENGINE START/STOP is pressed twice while at a relatively high speed, the engine will turn off and the transmission will automatically shift into N (Neutral). Once the vehicle is stopped, P (Park) can be selected.

P : This position locks the drive wheels. Use P (Park) when starting the vehicle to ensure the vehicle does not move.

⚠ Warning

It is dangerous to get out of the vehicle if the vehicle is not in P (Park) with the parking brake set. The vehicle can roll.

Do not leave the vehicle when the engine is running. If you have left the engine running, the vehicle can move suddenly. You or others could be injured. To be sure the vehicle will not move, even when you are on fairly level ground, always set the parking brake and shift to P (Park). See *Shifting Into Park* ⇨ *193*.

When the vehicle is stopped, press ENGINE START/STOP to turn off the vehicle. The transmission will shift into P (Park) automatically unless N (Neutral) is selected.

The vehicle will not shift into P (Park) if it is moving too fast. Stop the vehicle and shift into P (Park).

To shift into and out of P (Park), see *Shifting Into Park* ⇨ *193* and *Shifting out of Park* ⇨ *193*.

R : Use this gear to back up.

If the vehicle is shifted into R (Reverse) while the speed is too high, the vehicle will shift into N (Neutral). Reduce vehicle speed and try the shift again.

To shift into R (Reverse):

1. Bring the vehicle to a complete stop.
2. Pull the R (Reverse) switch on the center console.

To shift out of R (Reverse):

1. Bring the vehicle to a complete stop.
2. Shift into the desired gear.

At low vehicle speeds, R (Reverse) can be used to rock the vehicle back and forth to get out of snow, ice, or sand without damaging the transmission. See *If the Vehicle Is Stuck* ⇨ *185*.

N : In this position, the engine does not connect with the wheels. To restart the engine when the vehicle is already moving, use N (Neutral) only.

⚠ Warning

Shifting into a drive gear while the engine is running at high speed is dangerous. Unless your foot is firmly on the brake pedal, the vehicle could move very rapidly. You could lose control and hit people or objects. Do not shift into a drive gear while the engine is running at high speed.

Caution

Shifting out of P (Park) or N (Neutral) with the engine running at high speed may damage the transmission. The repairs would not be covered by the vehicle warranty. Be sure the engine is not running at high speed when shifting the vehicle.

Caution

The vehicle is not designed to stay in N (Neutral) for extended periods of time. It will automatically shift into P (Park).

To shift into N (Neutral), press and hold the N (Neutral) switch until the N indicator is red.

To shift out of N (Neutral):

1. Bring the vehicle to a complete stop.
2. Shift into the desired gear.

Maintaining N (Neutral) with Engine Off

This vehicle includes a method of keeping the vehicle in N (Neutral) while the engine is off.

This method is not to be used for vehicle towing. If the vehicle needs to be towed, see *Transporting a Disabled Vehicle* ⇨ *293*.

Driver Remains in Vehicle : To place the vehicle in N (Neutral) with the engine off and the vehicle occupied:

1. Ensure the vehicle is on level ground, the engine is running and the vehicle is in P (Park).
2. Apply the brake pedal.
3. Shift to N (Neutral).
4. Turn off the engine and release the brake pedal.
5. The indicator should continue to show N. If it does not, start the engine and repeat Steps 2–4.
6. The vehicle will now remain in N (Neutral).

Driver Leaves Vehicle : To place the vehicle in N (Neutral) with the engine off and the vehicle unoccupied:

1. Ensure the vehicle is on level ground, the engine is running and the vehicle is in P (Park).
2. Apply the brake pedal.
3. Open the door.
4. Shift to N (Neutral).
5. Turn off the engine and release the brake pedal.
6. The indicator should continue to show N. If it does not, start the engine and repeat Steps 2–5.
7. Exit the vehicle and close the door.
8. The vehicle may automatically shift to P (Park) upon re-entry.

Caution

A transmission hot message may display if the transmission fluid is too hot. Driving under this condition can damage the vehicle. Stop and idle the engine to cool the transmission fluid. This message clears when the transmission fluid has cooled sufficiently.

D : This position is for normal driving. If more power is needed for passing, press the accelerator pedal.

If the vehicle is shifted into D (Drive) while the speed is too high, the transmission will get ready to engage D (Drive). Reduce the vehicle speed, then the transmission will engage D (Drive).

To shift into D (Drive):

1. Bring the vehicle to a complete stop.
2. Pull the D (Drive) switch on the center console.

To shift out of D (Drive):

1. Bring the vehicle to a complete stop.
2. Shift to the desired gear.

Downshifting the transmission in slippery road conditions could result in skidding. See "Skidding" under *Loss of Control* ⇨ *172*.

The transmission can be shifted like a manual transmission using the paddle shift controls while in D (Drive). See *Manual Mode* ⇨ *198*.

Caution

Spinning the tires or holding the vehicle in one place on a hill using only the accelerator pedal may damage the transmission. The repair will not be covered by the vehicle warranty. If the vehicle is stuck, do not spin the tires. When stopping on a hill, use the brakes to hold the vehicle in place.

Manual Mode

Manual Paddle Shift

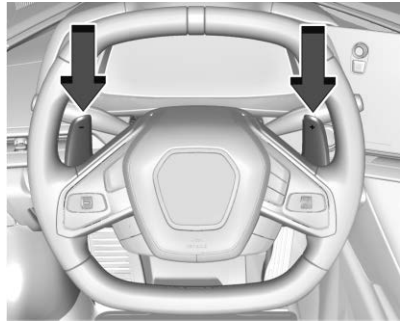

With the transmission in D (Drive), press the M (Manual Mode) switch on the center console to enter Manual Mode. Use the paddles on the steering wheel to manually upshift or downshift the transmission.
The right + (plus) paddle upshifts, and the left – (minus) paddle downshifts.

When using the Manual Paddle Shift system, the current gear will be displayed in the instrument cluster or the Head-Up Display (HUD), if equipped. See *Head-Up Display (HUD)* ⇨ *95*.

When accelerating the vehicle from a stop in snowy and icy conditions, shifting to 2 (Second) gear, when available, will allow the vehicle to gain more traction.

The Manual Paddle Shift system can be deactivated by pulling the D (Drive) switch on the center console.

With the transmission in D (Drive), pull the right + paddle or the left – paddle to place the transmission in Temporary Manual Paddle Shift mode.

To exit Temporary Manual Paddle Shift mode do one of the following:

- Hold the + paddle for more than one second.
- Drive at a steady speed without manual shifts or aggressive cornering for several seconds.
- Lower vehicle speed to 6 km/h (4 mph) or less.

While the Manual Paddle Shift system is active, the transmission will automatically downshift through the gears as the vehicle slows. The transmission will select 1 (First) gear as the vehicle stops. From a stop, the vehicle will start from and hold 1 (First) gear unless Manual Paddle Shifts are used to shift into a different gear, or D (Drive) is selected.

To cause the transmission to downshift to the lowest gear possible for the vehicle speed, in Manual Paddle Shift or Temporary Manual Paddle Shift mode:

- Pull and briefly hold the – paddle. If the paddle continues to be held as the vehicle slows, downshifts will continue as vehicle speed allows.

The Manual Paddle Shift system will not upshift or downshift if vehicle speed is too fast or too slow, and will not start from any gear other than 1 (First) gear.

If upshifting does not occur when necessary in Manual Paddle Shift mode, vehicle speed is limited to protect the engine. When in Temporary Manual Paddle Shift mode, the transmission will automatically upshift if the accelerator pedal is pressed all the way to the floor.

Manual Paddle Shift can be used with cruise control. See *Cruise Control* ⇨ *219*.

At maximum engine speed (rpm), auto-shifts will occur after a specified time period to protect the engine.

The vehicle speeds required for Manual Paddle Shift upshifts depend on several vehicle inputs, which will vary the allowed upshift speed by a few km/h (mph).

To prevent damage to the powertrain, Manual Paddle downshifts cannot be performed above certain speeds.

The vehicle speeds for allowed Manual Paddle shifts can vary by vehicle model or optional equipment; such as the Stingray Z51 with Electronic Limited-Slip Differential (eLSD) differs from non-Z51 with Mechanical Limited-Slip Differential (mLSD).

Stingray (LT2) with an Electronic Limited-Slip Differential (Z51)		
Upshift Allowed (into gear)	At Approximately	
	km/h	mph
2nd	15	9
3rd	25	16
4th	36	22
5th	47	29
6th	60	37
7th	76	47
8th	92	57
Maximum Downshift Inhibit Speed (into gear)	At Approximately	
	km/h	mph
1st	30	19
2nd	63	39
3rd	104	65
4th	164	102
5th	232	144
6th	Aero Limited	Aero Limited
7th	Aero Limited	Aero Limited

Stingray (LT2) with an Mechanical Limited-Slip Differential (Without Z51)		
Upshift Allowed (into gear)	At Approximately	
	km/h	mph
2nd	16	10
3rd	26	16
4th	37	23
5th	49	30
6th	63	39
7th	80	50
8th	97	60
Maximum Downshift Inhibit Speed (into gear)	At Approximately	
	km/h	mph
1st	30	19
2nd	63	39
3rd	113	70
4th	174	108
5th	245	152
6th	Aero Limited	Aero Limited
7th	Aero Limited	Aero Limited

Z06 (LT6)		
Upshift Allowed (into gear)	At Approximately	
	km/h	mph
2nd	14	9
3rd	24	15
4th	35	22
5th	47	29
6th	60	37
7th	77	48
8th	93	58
Maximum Downshift Inhibit Speed (into gear)	At Approximately	
	km/h	mph
1st	66	41
2nd	113	69
3rd	162	101
4th	225	140
5th	303	188
6th	Aero Limited	Aero Limited
7th	Aero Limited	Aero Limited

Double Paddle Declutch

Double Paddle Declutch allows the vehicle to temporarily disconnect the engine from the wheels, similar to N (Neutral). This feature is activated by pulling and holding both the + paddle and – paddle at the same time while the vehicle is in R (Reverse), D (Drive), or M (Manual Mode). The vehicle will remain in this condition until both the + paddle and – paddle are released. The R, D, or M indicator on the center shift console will flash red to indicate that the vehicle is in Double Paddle Declutch. In addition, the current gear state indicator in the Driver Information Center (DIC) may change to flashing blue to indicate that the vehicle is in Double Paddle Declutch. To exit Double Paddle Declutch, release both the + paddle and – paddle. The engine will reconnect to the wheels and the shift indicator will stop flashing. There are two Double Paddle Declutch exit styles:

Standard Exit : Engine power is reapplied to the wheels gently to support normal vehicle operation on public roads. This occurs when paddles are released under any of the these conditions:

- Accelerator pedal is fully released
- Vehicle speed is above 10 km/h (6 mph)

- Vehicle is in R (Reverse)
- Paddles are released separately

If the vehicle was in Temporary Manual Paddle Shift mode before entering Double Paddle Declutch, the vehicle will return to D (Drive) with automatic shifting upon exiting Double Paddle Declutch.

Rapid Exit : This is intended for use at a closed course race track and not on public roads. Engine power is reapplied to the wheels quickly to support spirited driving. The rate of launch is dependent on how much the accelerator pedal is pressed when the paddles are released. The further the accelerator pedal is pressed, the greater the rate of launch. Tire spin may occur if the Traction Control System (TCS) is turned off while performing a Rapid Exit. Rapid Exit launch occurs when all of the following conditions are met:

- Vehicle speed is below 10 km/h (6 mph)
- Vehicle is in D (Drive) or M (Manual Mode)
- Both paddles are released at the same time

With the accelerator fully pressed and the engine at the rev limiter, peak performance only occurs if the paddles are released within a short period of time after reaching the rev limit (i.e., a few seconds).

Manual Launch (Z06 model only) : While the vehicle is in Double Paddle Declutch, Manual Launch can be activated to gain more precise control over the engine speed to prepare for a Standard or Rapid Exit. To activate this feature, first enter Double Paddle Declutch, then release and repull either the + paddle or – paddle while keeping the opposite paddle held. The Performance Transmission Active Light will illuminate in the gauge cluster to indicate that Manual Launch has been activated. See *Performance Transmission Active* ⇨ *89*. When Manual Launch is active, the engine will respond differently when the accelerator pedal is pressed compared to normal Double Paddle Declutch. The accelerator pedal must be pressed further to increase the engine rpm and a lower engine rpm limit will be applied. This feature also provides faster engine response during a Rapid Exit if any of the Performance Traction Management (PTM) modes or Electronic Stability Control (ESC) Off has been selected. To exit Manual Launch, release both the + paddle and – paddle. The vehicle will also exit Double Paddle Declutch and the engine will reconnect to the wheels. A Standard Exit or Rapid Exit will be performed based on the same conditions listed previously.

⚠ Warning

When exiting Double Paddle Declutch, the vehicle may move rapidly. You could lose control and cause a crash with nearby people or objects. Be ready to release the accelerator pedal or apply the brakes immediately if the vehicle moves too quickly. Do not use the Double Paddle Declutch when people or objects are near.

Brakes

Electric Brake Boost

Vehicles equipped with electric brake boost have hydraulic brake circuits that are electronically controlled when the brake pedal is applied during normal operation. The system performs routine tests and turns off within a few minutes after the vehicle is turned off. Noise may be heard during this time. If the brake pedal is pressed during

the tests or when the electric brake boost system is off, a noticeable change in pedal force and travel may be felt. This is normal.

Antilock Brake System (ABS)

The Antilock Brake System (ABS) helps prevent a braking skid and maintain steering while braking hard.

If there is a problem with ABS, this warning light stays on. See *Antilock Brake System (ABS) Warning Light* ⇨ *88*.

ABS does not change the time needed to get a foot on the brake pedal and does not always decrease stopping distance. If you get too close to the vehicle ahead, there will not be enough time to apply the brakes if that vehicle suddenly slows or stops. Always leave enough room ahead to stop, even with ABS.

Using ABS

Do not pump the brakes. Just hold the brake pedal down firmly. Hearing and feeling ABS operate is normal.

Braking in Emergencies

ABS allows steering and braking at the same time. In many emergencies, steering can help even more than braking.

Electric Parking Brake

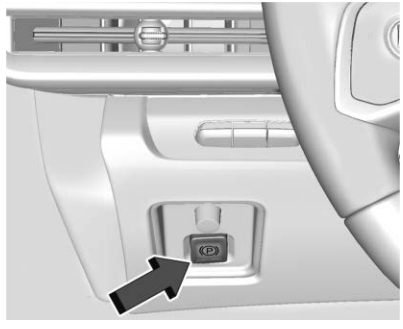

The Electric Parking Brake (EPB) can always be applied, even if the vehicle is off. In case of insufficient electrical power, the EPB cannot be applied or released. To prevent draining the battery, avoid unnecessary repeated cycles of the EPB.

The system has a red parking brake status light and an amber service parking brake warning light. See *Electric Parking Brake Light* ⇨ *88* and *Service Electric Parking Brake Light* ⇨ *88*. There are also parking brake-related Driver Information Center (DIC) messages.

Before leaving the vehicle, check the red parking brake status light to ensure that the parking brake is applied.

EPB Apply

To apply the EPB:

1. Be sure the vehicle is at a complete stop.
2. Press the EPB switch momentarily.

The red parking brake status light will flash and then stay on once the EPB is fully applied. If the red parking brake status light flashes continuously, then the EPB is only partially applied or there is a problem with the EPB. A DIC message will display. Release the EPB and try to apply it again. If the light does not come on, or keeps flashing,

have the vehicle serviced. Do not drive the vehicle if the red parking brake status light is flashing. See your dealer.

If the amber service parking brake warning light is on, press the EPB switch. Continue to hold the switch until the red parking brake status light remains on. If the amber service parking brake warning light is on, see your dealer.

If the EPB is applied while the vehicle is moving, the vehicle will decelerate as long as the switch is pressed. If the switch is pressed until the vehicle comes to a stop, the EPB will remain applied.

The vehicle may automatically apply the EPB in some situations when the vehicle is not moving. This is normal, and is done to periodically check the correct operation of the EPB system, or at the request of other safety functions that utilize the EPB.

If the EPB fails to apply, block the rear wheels to prevent vehicle movement.

EPB Release

To release the EPB:

1. Turn the ignition on or to accessory mode.
2. Apply and hold the brake pedal.
3. Press the EPB switch momentarily.

The EPB is released when the red parking brake status light is off.

If the amber service parking brake warning light is on, release the EPB by pressing and holding the EPB switch. Continue to hold the switch until the red parking brake status light is off. If either light stays on after release is attempted, see your dealer.

Caution

Driving with the parking brake on can overheat the brake system and cause premature wear or damage to brake system parts. Make sure that the parking brake is fully released and the brake warning light is off before driving.

Automatic EPB Release

The EPB will automatically release if the vehicle is running, placed into gear, and an attempt is made to drive away. Avoid rapid acceleration when the EPB is applied, to preserve parking brake lining life.

Brake Assist

Brake Assist detects rapid brake pedal applications due to emergency braking situations and provides additional braking to activate the Antilock Brake System (ABS) if the brake pedal is not pushed hard enough to activate ABS normally. Minor noise, brake pedal pulsation, and/or pedal movement during this time may occur. Continue to apply the brake pedal as the driving situation dictates. Brake Assist disengages when the brake pedal is released.

Hill Start Assist (HSA)

⚠ Warning

Do not rely on the HSA feature. HSA does not replace the need to pay attention and drive safely. You may not hear or feel alerts or warnings provided by this system. Failure to use proper care when driving may result in injury, death, or vehicle damage. See *Defensive Driving* ⇨ *170*.

When the vehicle is stopped on a grade, Hill Start Assist (HSA) prevents the vehicle from rolling in an unintended direction during the transition from brake pedal release to

accelerator pedal apply. The brakes release when the accelerator pedal is applied. If the accelerator pedal is not applied within a few minutes, the Electric Parking Brake will apply. The brakes may also release under other conditions. Do not rely on HSA to hold the vehicle.

HSA is available when the vehicle is facing uphill in a forward gear, or when facing downhill in R (Reverse). The vehicle must come to a complete stop on a grade for HSA to activate.

Ride Control Systems

Traction Control/Electronic Stability Control

The vehicle has a Traction Control System (TCS) and a StabiliTrak/Electronic Stability Control (ESC) system. These systems help limit wheel spin and assist the driver in maintaining control, especially on slippery road conditions.

TCS activates if it senses that the rear wheels are spinning too much or are beginning to lose traction. When this happens, TCS applies the brakes to the spinning wheel and reduces engine power (by closing the throttle and managing engine spark) to limit wheel spin.

StabiliTrak/ESC activates when the vehicle senses a difference between the intended path and the direction the vehicle is actually traveling. StabiliTrak/ESC selectively applies braking pressure to any one of the vehicle wheel brakes to assist the driver in keeping the vehicle on the intended path.

If cruise control is being used when TCS begins to limit wheel spin, the cruise control will automatically disengage. Cruise control may be reengaged when road conditions allow. See *Cruise Control* ⇨ *219*.

If the driver disables TCS, cruise control will disengage. Cruise control will also be disabled if Performance Traction Management (PTM) is selected, or if StabiliTrak is turned off.

Both systems come on automatically when the vehicle is started and begins to move. The systems may be heard or felt while they are operating or while performing diagnostic checks. This is normal and does not mean there is a problem with the vehicle.

It is recommended to leave both systems on for normal driving conditions, but it may be necessary to turn TCS off if the vehicle gets stuck in sand, mud, ice, or snow. See *If the Vehicle Is Stuck* ⇨ *185* and “Turning the Systems Off and On” later in this section.

The indicator light for both systems is in the instrument cluster. This light will:

- Flash when TCS is limiting wheel spin
- Flash when StabiliTrak/ESC is activated
- Flash when ABS is active
- Turn on and stay on when either system is not working

If either system fails to turn on or to activate, a message displays in the Driver Information Center (DIC), and comes on and stays on to indicate that the system is inactive and is not assisting the driver in maintaining control. The vehicle is safe to drive, but driving should be adjusted accordingly.

If comes on and stays on:

1. Stop the vehicle.
2. Turn the engine off and wait 15 seconds.
3. Start the engine.

Drive the vehicle. If comes on and stays on, the vehicle may need more time to diagnose the problem. If the condition persists, see your dealer.

Turning the Systems Off and On

The TCS/StabiliTrak/ESC button is on the center console.

Caution

Do not repeatedly brake or accelerate heavily when TCS is off. The vehicle driveline could be damaged.

To turn off only TCS, press and release . The Traction Off light illuminates in the instrument cluster. To turn TCS on again, press and release . The Traction Off light displayed in the instrument cluster will turn off.

If TCS is limiting wheel spin when is pressed, the system will not turn off until the wheels stop spinning.

To turn off both TCS and StabiliTrak/ESC, press and hold until the Traction Off light and StabiliTrak/ESC OFF light illuminate and stay on in the instrument cluster.

To turn TCS and StabiliTrak/ESC on again, press and release . The Traction Off light and StabiliTrak/ESC OFF light in the instrument cluster turn off.

If the Tire Pressure Monitor System (TPMS) system is malfunctioning and the DIC displays SERVICE TIRE MONITOR SYSTEM, StabiliTrak/ESC will be affected as follows:

- StabiliTrak/ESC cannot be turned off by the driver.
- If StabiliTrak/ESC is off, it will be turned on automatically.
- Competitive Driving Mode or Performance Traction Management is unavailable.
- StabiliTrak/ESC will feel different in aiding and maintaining directional control.

Adding accessories can affect the vehicle performance. See *Accessories and Modifications* ⇨ 232.

For Z06 Models Only

When the convertible top is down or the removable hard top is removed from the vehicle and ESC is in Competitive Mode, Performance Traction Management (PTM) mode, or if it has been turned off, the ESC Off light will turn off when the vehicle exceeds 160 km/h (100 mph), indicating that StabiliTrak/ESC is fully enabled.

Hill Rollback Control

If the vehicle is in gear and inadvertently rolls backwards, Hill Rollback Control helps limit the rollback to a very low speed. A noise may be heard while the vehicle speed is actively being controlled. A Driver Information Center (DIC) message displays when active.

Driver Mode Control

Driver Mode Control (DMC) allows the driver to adjust the overall driving experience to better suit preference by selecting different modes.

Drive mode availability and affected driver systems are dependent upon vehicle trim level, region, and optional features. Driver modes may include: Weather, Tour, Sport, and Track, along with two customizable modes: My Mode and Z-Mode.

When each mode is selected, an indicator will come on in the instrument cluster and stay on.

Mode Activation

To activate My Mode, Weather, Tour, Sport and Track Mode, turn the Driver Mode Control (DMC) knob on the center console to make a mode selection. When a mode is selected, an indicator will come on in the instrument cluster and stay on.

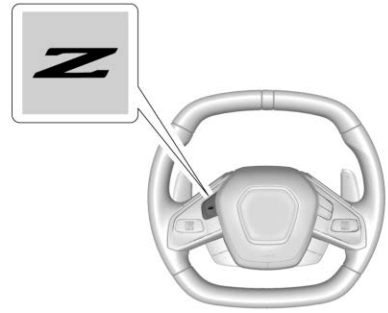

To activate Z-Mode, press the Z-Mode button on the steering wheel. To deactivate, select a different mode through the DMC knob, or press the Z-Mode button on the steering wheel.

Mode Description

Weather : Used for slippery surfaces to help control wheel speed. This can compromise the acceleration on dry asphalt.

This feature is not intended for use when the vehicle is stuck in sand, mud, ice, snow, or gravel. If the vehicle becomes stuck, see *If the Vehicle Is Stuck* ⇨ *185*. See "Driver Mode Attributes," later in this section.

Tour : Use for normal city and highway driving to provide a smooth, soft ride. This setting provides a balanced setting between comfort and handling. This is the standard mode. See "Driver Mode Attributes," later in this section.

Sport : Use when road conditions or personal preference demand a more controlled response. When this mode is selected, the vehicle will immediately downshift. The steering will change to provide more precise control. If the vehicle has Magnetic Ride Control, the suspension will change to provide better cornering performance.

Competitive Mode can be accessed through this mode. See *Competitive Driving Mode* ⇨ *215*.

Track : Use for closed race tracks. Use when maximum vehicle handling is desired. When in Track Mode, the dual clutch transmission and steering will adjust to track settings. In this mode the vehicle also monitors driving behaviors and automatically enables Performance Shift features when spirited driving is detected. These features maintain lower transmission gears to increase available engine braking and improve acceleration response. The vehicle will exit this feature and return to normal operation after a short time when spirited driving is no longer detected.
If equipped, this mode also modifies real time damping, exhaust valve tuning, engine sound, brake pedal feel, Electronic Stability Control (ESC) performance and Traction Control System (TCS) performance.

Performance Traction Management (PTM) can be accessed through this mode. See "Performance Traction Management," later in this section.

My Mode : Use to personalize everyday driving. This mode allows the driver to configure the driver systems to their driving preferences. This mode modifies the suspension, steering, brake feel, and engine sound. My Mode will remain active across ignition cycles.

Through the center display, the following vehicle subsystems may be available for customization in this mode:

Engine Sound: Stealth, Tour, Sport, Track

Steering: Tour, Sport, Track

Suspension: Tour, Sport, Track

Brake Feel: Tour, Sport, Track

For a more detailed description on how each driver system is changed, see "Drive Mode Customization," later in this section. Additionally the cluster theme can be set up using the display menu in the cluster.

Z-Mode : Use to personalize dynamic driving. This mode allows the driver to configure the driver systems to their own preference for maximum handling. Z-Mode further enhances the experience by adding powertrain customization. This mode modifies Engine/Shift, Brake Feel, Steering, Suspension, Engine Sound, and, Performance Traction Management, if equipped.

Through the center display, the driver can customize multiple settings. The following vehicle subsystems may be available for customization in this mode:

Engine Sound: Stealth, Tour, Sport, Track

Steering: Tour, Sport, Track

Suspension: Tour, Sport, Track

Engine/Shift: Weather, Tour, Sport, Track

Brake Feel: Tour, Sport, Track

PTM: Off, Wet, Dry, Sport, Race 1, Race 2

For a more detailed description on how each driver system is changed, see “Drive Mode Customization,” later in this section. For more information on PTM, see “Performance Traction Management,” later in this section. Additionally, the cluster theme can be set up using the display menu in the cluster.

Driver Mode Attributes

Modes:	MY MODE	WEATHER	TOUR	SPORT	TRACK	Z-MODE
Cluster Display	Tour (Default), Sport, Track, Weather (with any info tile set up)	Weather	Tour	Sport	Track	Tour, Sport, Track, Weather (with any info tile set up)
Throttle Progression	Tour	Weather	Tour	Sport	Track	Tour, Sport, Track, Weather
Trans Shift Mode (if equipped)	Tour	Weather	Tour	Sport	Track	Tour, Sport, Track, Weather
Active Fuel Management	Enabled (In 4th – 8th gear for mLSD vehicles)	Enabled (In 4th – 8th gear for mLSD vehicles)	Enabled (In 4th – 8th gear)	Enabled (In 5th – 8th gear)	Disable	Tour, Sport, Track, Weather
Performance Traction or Competitive Driving Mode Availability	Unavailable	Unavailable	Unavailable	Comp Mode (available)	PTM (available)	PTM (available)
Engine Sound	Stealth, Tour, Sport, Track	Stealth	Tour	Sport	Track	Stealth, Tour, Sport, Track
Steering	Tour, Sport, Track	Tour	Tour	Sport	Track	Tour, Sport, Track
Suspension (if equipped with Magnetic Ride)	Tour, Sport, Track	Tour	Tour	Sport	Track	Tour, Sport, Track
Brake Response	Tour, Sport, Track	Tour	Tour	Sport	Track	Tour, Sport, Track

Cluster Display

For more information on the display themes of the Drive modes on the instrument cluster, see *Instrument Cluster* ⇨ *79* > Options > Display themes.

Throttle Progression

Adjusts throttle sensitivity by selecting how quickly or slowly the throttle reacts to input.

Throttle Progression is a preset of Powertrain and cannot be modified or changed independently.

Transmission Shift Operation

Basic:

- Transmission upshifts and downshifts are selected based on vehicle speed and accelerator position to optimize comfort and fuel economy during mild driving conditions.

Driver Influenced Gear Selection:

- Aggressive driving will influence both the upshift and downshift points in all modes. When engaged, the Performance Transmission Active light displays. See *Performance Transmission Active* ⇨ *89*.

  When Performance Transmission is activated from a standstill, by selecting PTM Race 1 or Race 2, the transmission shift map is in the most aggressive state where upshifts are only achieved at high revolutions per minute (rpm), downshifts happen early, and the lowest gear is selected for cornering. Transmission behavior will transition to a level appropriate to the current driving behavior after a short period of time.
  If PTM Race 1 or Race 2 are not selected, the Performance Transmission Active behavior still activates automatically after a sustained period of performance driving is detected. See "Performance Traction Management (PTM)" later on in this section.
- Criteria which have influence are: driving mode, accelerator, brakes, lateral, and longitudinal loading.
- Changes in gear selection behavior due to aggressive driving can include:
  - Downshifting early with higher rpm's during aggressive braking (i.e. entering a corner)
  - Altering upshifts while experiencing lateral acceleration
  - Not upshifting when the accelerator is released to avoid unnecessary shifts if the accelerator is re-applied
  - Recognizing sporty driving and anticipate upcoming corners with the appropriate gear selection entering and exiting
- Driver Modes
  - Driver influenced changes are effective in all driving modes, however the aggressiveness of the transmission response will increase between Tour, Sport, and Track Modes respectively.

Active Fuel Management (Engine Cylinder Shuts Off)

- Normal with Dual Clutch Transmission: The engine uses 8-cylinder mode when accelerating, but changes to 4-cylinder mode when coasting.

Active Fuel Management is a preset of Powertrain and cannot be modified or changed independently.

Engine Sound

Caution
Using a stealth engine sound setting during spirited driving will cause the exhaust system to overheat and damage the variable exhaust valves. Do not use this setting when auto-crossing or driving on high speed tracks.

If available, engine sound settings change when the variable exhaust valves open.

Steering (Assist Effort)

Adjusts from a lighter steering feel to reduced assist for more steering feel.

Magnetic Ride Control

If equipped, this feature adjusts the shock dampening firmness based on driving conditions to improve comfort and performance.

Drive Mode Customization

The vehicle is equipped to modify the following vehicle settings base on vehicle content. Through the infotainment home screen, select Settings > Vehicle > "Drive Mode Customization" to customize and personalize My Mode and/or Z-Mode.

Engine Sound

Engine Sound adjusts the volume of engine noise. Setting range from quietest to loudest volume as you move from Stealth through Track.

- Stealth, Tour, Sport, Track

Steering

This setting adjusts the effort required to turn the steering wheel. The steering wheel offers better feedback but requires more effort as you move from Tour to Track.

- Tour, Sport, Track

Suspension

This setting adjusts the firmness of the suspension in the vehicle. Suspension adjust stiffness of the shocks and / or springs. The ride is more comfortable at lower settings and is stiffer at higher settings for better control.

- Tour, Sport, Track

Engine/Shift

This setting adjusts the throttle response, gear shifting and engine performance. An increased throttle response enhances the acceleration feel as you move toward Track, but with a comfort trade-off due to more aggressive gear shifting.

- Weather, Tour, Sport, Track

Brake Feel

This setting adjusts the brake pedal response. Settings range from a slower response for more comfortable driving to the quickest response for quicker deceleration. Track allows for improved pedal precision at higher decelerations for high performance driving.

- Tour, Sport, Track

Performance Traction Management (PTM)

To activate PTM through Z-Mode, configure Z-Mode to the desired PTM state in the center stack (Settings > Vehicle > Drive Mode Customization > Z-Mode). Press the Z-Mode button once to activate Z-Mode. When PTM is configured on, a message will appear in the Driver Information Center (DIC) "Z-Mode Active — Press Again for PTM On — ESC May be Disabled."

To confirm, and enter PTM, press the Z-Mode button again. The PTM state can now be modified using the mode knob or changing the Z-Mode setting in the center stack. Both the Z-Mode and PTM indicators will be displayed.

To cancel, press the center dismiss button on the steering wheel (Z-Mode remains active). Selecting PTM states may modify other Z-Mode customization options.

- Off, Wet, Dry, Sport, Race 1, Race 2

Front Lift System

A two-position lift actuator (one per damper) with 35 mm (1.5 in) of stroke will hydraulically raise the front of the vehicle to provide approximately 50 mm (2 in) of increased clearance in approximately three seconds (height and time will vary by vehicle). The Front Lift System will allow you to lift the front of the vehicle to enter a driveway, driving over curbs, speed bumps or onto ramps or a trailer.

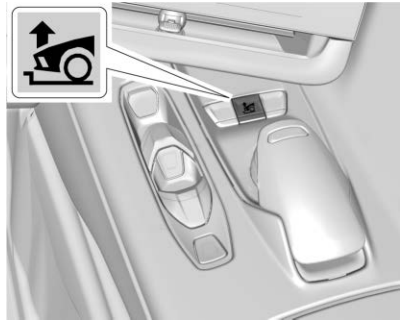

To use the Front Lift System, press the button on the center console to raise or lower the vehicle. This feature can be operated at speeds up to 38 km/h (24 mph) when the engine is running. The system functions based on the vehicle's state or operating mode:

- The system will not raise up when the doors or underhood storage compartment is open.
- The system can be raised or lowered by the pushbutton, when the vehicle is in RUN or in accessory mode.
- If the vehicle is in the raised position and is driven at speeds above 38 km/h (24 mph), it will automatically lower.
- If the vehicle is turned off, it will automatically lower.
- If a vehicle door is opened during lowering, the movement will pause for 15 seconds then continue to lower, but at a slower rate.

If equipped, the front height can be raised automatically using GPS navigation in the vehicle. The vehicle will automatically lift in up to 1,000 programmable locations. Once the button is pushed, a notification will appear on the Driver Information Center (DIC) and prompt the driver if they would like to "Remember" the location. The driver can select this function through the steering wheel controls, see *Steering Wheel Controls* ⇨ *111*.

The driver can also delete stored locations for the automatic lift.

If the vehicle is raised automatically using GPS, it will automatically lower once the vehicle is located about 60 meters (197 feet) from the programmed location. To disable this function, turn off the GPS location via the vehicle Customization Settings. The Front Lift System will now only operate using the pushbutton command, and the "Auto Lift Location Remembered" confirmation message will not display.

The Front Lift System can also be used in accessory mode. Put the vehicle in accessory mode and press and hold the button on the center console for 10 consecutive seconds to automatically raise the vehicle.

The Driver Information Center (DIC) may display the message “Lift System Unavailable” if:

- any doors are ajar
- the hood is open
- the vehicle is moving over 38 km/h (24 mph)
- too many lift requests within a short period

The Front Lift System should not be used to service the vehicle. Do not place anything or body parts under the vehicle while lifted. See *Recommended Fluids and Lubricants* ⇨ *310*.

Competitive Driving Mode

If equipped, Competitive Driving Mode, Performance Traction Management (PTM), and Launch Control are systems designed to allow increased performance while accelerating and/or cornering. This is accomplished by regulating and optimizing the engine, brakes, and suspension performance. These modes are for use at a closed course race track and are not intended for use on public roads. They will not compensate for driver inexperience or lack of familiarity with a race track. Drivers who prefer to allow the system to have more control of the engine, brakes, and suspension are advised to turn on the normal traction control and StabiliTrak/ Electronic Stability Control (ESC) systems on.

Competitive Driving Mode

Competitive Driving Mode allows full engine power while StabiliTrak/ESC helps maintain directional control of the vehicle by selective brake application. In this mode, the Traction Control System (TCS) is off and Launch Control is available.

Adjust your driving style to account for the available engine power. See “Launch Control” later in this section.

These lights are on when the vehicle is in the Competitive Driving Mode.

To select this optional handling mode, the vehicle mode must be Sport or Track (if equipped with PTM, then Competitive Driving Mode is only available in Sport). Then quickly press OFF on the center console two times. ESC COMPETITIVE MODE displays in the Driver Information Center (DIC).

When OFF is pressed again, the traction off light TC and StabiliTrak/ESC OFF light OFF will go out.

Performance Traction Management (PTM)

If equipped, PTM integrates the TCS, StabiliTrak/ESC, and Magnetic Ride Control systems to provide improved and consistent performance when cornering. The amount of available engine power is based on the mode selected, track conditions, driver skill, and the radius of each corner.

This light is on when the vehicle is in the PTM Mode.

To select PTM mode, the vehicle mode must be in Track Mode. Then quickly press on the center console two times. Performance Traction Wet — ESC On displays in the DIC.

PTM is activated in two different methods. For more information on how to activate PTM through Z Mode, see *Driver Mode Control* ⇨ *208*.

To experience the performance benefit of this system, after entering a curve and at the point where normal acceleration occurs, fully press the accelerator pedal. The PTM system modifies the level of engine power for a smooth and consistent corner exit.

The PTM system contains five modes. These modes are selected by turning the MODE switch on the center console. Scroll through modes by turning the mode control dial.

The following is a DIC display description and the recommended usage of each mode:

Performance Traction – Wet

- Intended for all driver skill levels
- Wet or damp conditions only — not intended for use in heavy rain or standing water
- StabiliTrak/ESC is on and engine power is reduced based on conditions

Performance Traction – Dry

- For use by less experienced drivers or while learning a new track
- Dry conditions only
- StabiliTrak/ESC is on and engine power is slightly reduced

Performance Traction – Sport

- For use by drivers who are familiar with the track
- Dry conditions only
- Requires more driving skill than Performance Traction – Dry
- StabiliTrak/ESC is on and more engine power is available than in Performance Traction – Dry

Performance Traction – Race 1

- For use by drivers who are familiar with the track
- Dry conditions only
- Requires more driving skill than Performance Traction – Dry or Performance Traction – Sport
- StabiliTrak/ESC is off and available engine power is the same as Performance Traction – Sport

Performance Traction – Race 2

- For use by experienced drivers who are familiar with the track
- Dry conditions only
- Requires more driving skill than in other modes
- StabiliTrak/ESC is off and engine power is available for maximum cornering speed

Press and release to turn off PTM and return to the TCS and StabiliTrak/ESC systems. The traction off light and StabiliTrak Off light will go out.

Launch Control (Sport and Track Mode Only)

A Launch Control feature is available, within Competitive Driving Mode or PTM, on all vehicles to allow the driver to achieve high levels of vehicle acceleration in a straight line. Launch Control is a form of TCS that manages tire spin, and transmissions clutch, while launching the vehicle. This feature is intended for use during closed course race events where consistent zero to 60 and quarter mile times are desirable.

Caution

The new vehicle break-in period should be completed before using the launch control feature, otherwise performance will be limited and damage may occur to the powertrain/engine. See *New Vehicle Break-In* ⇨ *189*.

Launch Control is only available when the following criteria are met:

- Competitive Driving Mode or any of the PTM Modes are selected (if equipped). See *Driver Mode Control* ⇨ *208*.
- The steering wheel must be straight.
- The driver door must be closed.
- The vehicle must be in D (Drive) or M (Manual Mode).
- The parking brake must not be engaged.

Launching the Vehicle

- Ensure the vehicle is in Competitive Driving Mode or any of the PTM modes.
- The brake pedal must be firmly pressed to the floor, equivalent to a panic brake event.
- While maintaining the brake pedal, the accelerator pedal is rapidly applied to wide open throttle. If the vehicle rolls due to wide open throttle or engine speed does not exceed 3,000 Revolutions Per Minute (RPM), release the throttle, press the brake pedal more firmly, and reapply the accelerator to wide open throttle.

The Launch Control feature initially limits engine speed as the driver rapidly applies the accelerator pedal to wide open throttle. Allow the engine RPMs to stabilize.
A smooth, quick release of the brake pedal, while maintaining the fully pressed accelerator pedal, will manage tire slip and transmissions clutch. After the vehicle is launched, the system continues in Competitive Driving Mode or PTM.

Custom Launch Control

If equipped, Custom Launch Control allows the following parameters for Launch Control to be modified:

- Launch RPM
- Slip Target (5%–15%)

Adjusting the Launch RPM will also change the behavior of the transmission during the start of the launch. The higher the Launch RPM, the faster the clutch will be applied resulting in greater acceleration. This parameter can be used to match the launch behavior to the available tire traction. If the driving wheels spin excessively during the launch, reduce the Launch RPM.

To adjust the Launch RPM, all of these conditions must be met:

- Competitive Driving Mode or any of the PTM Modes are selected (if equipped). See *Driver Mode Control* ⇨ *208*.
- The steering wheel must be straight.
- The driver door must be closed.
- The vehicle must be in D (Drive) or M (Manual Mode).
- The parking brake must not be engaged.

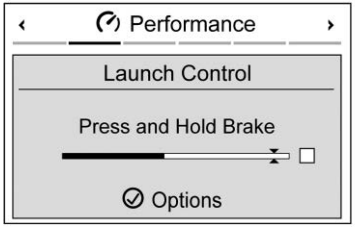

1. Using the DIC buttons on the right side of the steering wheel, navigate to the performance menu. See *Instrument Cluster* ⇨ *79*.
2. Select Launch Control > Custom.

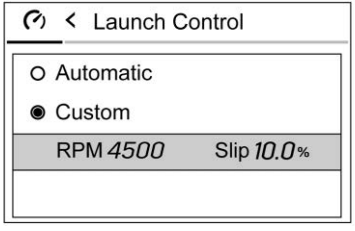

3. Scroll down to Launch RPM.

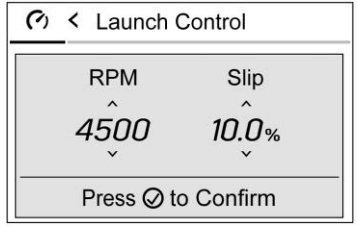

4. Adjust the desired RPM: 3500, 4000, 4500, 4750, 5000
5. Set Slip Target to custom desired setting.

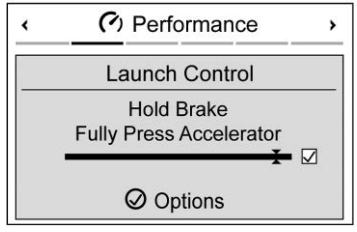

6. Return to the landing page of Launch Control. Firmly press and hold the brake pedal to activate Launch Control.

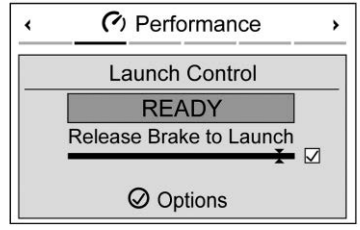

7. Fully press the accelerator. Release the brake pedal to launch the vehicle.

Limited-Slip Differential (Stingray Models Without Z51 Performance Package)

The electrical limited-slip differential provides more traction on snow, mud, ice, sand, or gravel. It works like a standard axle most of the time, but when traction is low, this feature allows the drive wheel with the most traction to move the vehicle. See *Competitive Driving Mode* ⇨ *215* and *Maintenance Schedule* ⇨ *306*.

Limited-Slip Differential (Stingray With Z51 Performance Package and Z06 model)

The Electrical Limited-Slip Differential (eLSD) is a hydraulically actuated clutch system inside the transaxle. It can infinitely vary the clutch engagement between 0 and 2250 N*m (1659 lb-ft) of breakaway torque between the rear wheels. When necessary it responds from open to full engagement in fractions of a second. Smaller clutch adjustments happen even faster.

The eLSD:

- Uses the vehicle sensors and driver inputs to determine the optimum amount of clutch engagement for the conditions.
- Improves traction while cornering by changing the engagement to achieve a balance between directional control and acceleration.
- Provides optimal engagement for high-speed control and stability without affecting precise steering and turn-in.
- Improves vehicle stability during spirited driving and evasive maneuvers. It is fully integrated with the Active Handling and Performance Traction Management (PTM) systems (if equipped).

There are unique calibrations based on the Traction Control System (TCS) setting. eLSD modes change automatically when the traction control button is pressed. No unique input from the driver is required.

- Mode 1 is the standard mode when the vehicle is started. It provides a touring calibration with an emphasis on vehicle stability. Mode 1 is also used in PTM Wet mode.
- Mode 2 is engaged when both TCS and StabiliTrak are turned off. This calibration provides more nimble corner turn-in, and is biased for better traction out of corners.
- Mode 3 is engaged when PTM is engaged in Dry, Sport 1 & 2, and Race modes. This is a nimble calibration with similar functionality as eLSD Mode 2, however, it is integrated to work with PTM.
- Mode 4 is engaged when TCS is selected off, but StabiliTrak remains on. Vehicle stability is still the priority, while allowing for optimized traction out of corners.

Cruise Control

With cruise control, a speed of about 40 km/h (25 mph) or more can be maintained without keeping your foot on the accelerator. Cruise control does not work at speeds below about 40 km/h (25 mph).

⚠ Warning

Cruise control can be dangerous where you cannot drive safely at a steady speed. Do not use cruise control on winding roads or in heavy traffic.

Cruise control can be dangerous on slippery roads. On such roads, fast changes in tire traction can cause excessive wheel slip, and you could lose control. Do not use cruise control on slippery roads.

If the Traction Control System (TCS) begins to limit wheel spin while you are using cruise control, the cruise control automatically disengages. See *Traction Control/Electronic Stability Control* ⇨ *206*. When road conditions allow for using safely again, cruise control can be turned back on.

If the brakes are applied, cruise control disengages.

Cruise control will disengage if either TCS or StabiliTrak/Electronic Stability Control (ESC) is turned off.

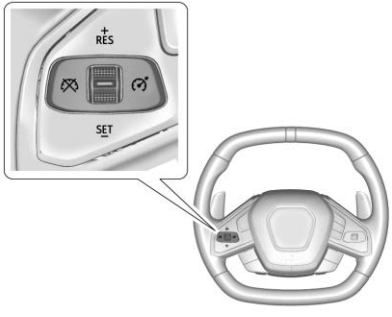

: Press to turn cruise control on or off. A white indicator comes on in the instrument cluster when cruise is turned on.

+RES : If there is a set speed in memory, press briefly to resume to that speed or press and hold to accelerate. If cruise control is already engaged, use to increase vehicle speed.

SET– : Press briefly to set the speed and activate cruise control. If cruise control is already engaged, use to decrease vehicle speed.

: Press to disengage cruise control without erasing the set speed from memory.

The speedometer reading can be displayed in either English or metric units. See *Instrument Cluster* ⇨ *79*. The increment value used depends on the units displayed.

Setting Cruise Control

If is on when not in use, SET– or +RES could get pressed and go into cruise when not desired. Keep off when cruise is not being used.

1. Press to turn the cruise system on.
2. Get up to the desired speed.
3. Press and release SET– on the steering wheel.
4. Remove foot from the accelerator.

The cruise control indicator on the instrument cluster turns green after cruise control has been set to the desired speed. See *Instrument Cluster* ⇨ *79*.

Resuming a Set Speed

If the cruise control is set at a desired speed and then the brakes are applied or is pressed, the cruise control is disengaged without erasing the set speed from memory.

Once the vehicle reaches about 40 km/h (25 mph) or more, briefly press +RES. The vehicle returns to the previous set speed.

Increasing Speed While Using Cruise Control

Do one of the following:

- Press and hold +RES until the desired speed is reached, then release it.
- To increase vehicle speed in small increments, briefly press +RES. For each press, the vehicle goes about 1 km/h (1 mph) faster.

Reducing Speed While Using Cruise Control

Do one of the following:

- Press and hold SET– until the desired lower speed is reached, then release it.
- To decrease the vehicle speed in small increments, briefly press SET–. For each press, the vehicle goes about 1 km/h (1 mph) slower.

Passing Another Vehicle While Using Cruise Control

Use the accelerator pedal to increase the vehicle speed. When you take your foot off the pedal, the vehicle will slow down to the previously set cruise speed.

While pressing the accelerator pedal or shortly following the release to override cruise control, briefly pressing SET– will result in cruise set to the current vehicle speed.

Using Cruise Control on Hills

How well the cruise control works on hills depends upon the vehicle speed, load, and the steepness of the hills. When going up steep hills, you may have to step on the accelerator pedal to maintain your speed. When going downhill, you may have to brake or shift to a lower gear to keep your speed down. If the brake pedal is applied, cruise control will disengage.

Cruise Control in Manual Paddle Shift Gear Selection

When the vehicle is in M (Manual Mode) and the manual paddle shift controls are not being used, cruise control operates in the same manner as D (Drive).

When the vehicle is in M (Manual Mode) and the manual paddle shift controls are being used, cruise control operates as follows:

- If cruise control is active and a gear is selected with the manual paddle shift controls, the vehicle speed is maintained in the driver selected gear and will not automatically upshift or downshift the transmission while the driver gear selection is active.
- If driving in hilly terrain, cruise control may not be able to maintain vehicle speed if an upshift or downshift is not selected by the driver. While driving on hilly terrain and cruise control is active with a manual paddle shift gear selection, the driver must select the proper gear for the terrain or select D (Drive) on the shifter for full automatic transmission operation.

Ending Cruise Control

- Step lightly on the brake pedal.
- Shift the transmission to N (Neutral).
- Press .
- To turn off cruise control, press .

Erasing Speed Memory

The cruise control set speed is erased from memory if is pressed or if the ignition is turned off.

Driver Assistance Systems

This vehicle may have features that work together to help avoid crashes or reduce crash damage while driving, backing, and parking. Read this entire section before using these systems.

⚠ Warning

Do not rely on the Driver Assistance Systems. These systems do not replace the need for paying attention and driving safely. You may not hear or see alerts or warnings provided by these systems. Failure to use proper care when driving may result in injury, death, or vehicle damage. See *Defensive Driving* ⇨ *170*.

Under many conditions, these systems will not:

- Detect children, pedestrians, bicyclists, or animals.

(Continued)

Warning (Continued)

- Detect vehicles or objects outside the area monitored by the system.
- Work at all driving speeds.
- Warn you or provide you with enough time to avoid a crash.
- Work under poor visibility or bad weather conditions.
- Work if the detection sensor is not cleaned or is covered by ice, snow, mud, or dirt.
- Work if the detection sensor is covered up, such as with a sticker, magnet, or metal plate.
- Work if the area surrounding the detection sensor is damaged or not properly repaired.

Complete attention is always required while driving, and you should be ready to take action and apply the brakes and/or steer the vehicle to avoid crashes.

Audible Alert

Some driver assistance features alert the driver of obstacles by beeping. To view available settings for this feature, touch the Settings icon on the infotainment home page. Select "Vehicle" to display the list of available options and select "Comfort and Convenience".

Cleaning

Depending on vehicle options, keep these areas of the vehicle clean to ensure the best driver assistance feature performance. Driver Information Center (DIC) messages may display when the systems are unavailable or blocked.

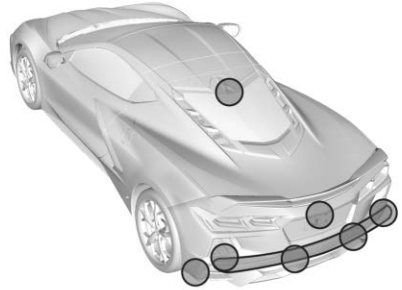

- Front and rear bumpers and the area below the bumpers
- Front grille and headlamps
- Front camera lenses in the front grille or near the front emblem
- Front side and rear side panels
- Outside of the windshield in front of the rearview mirror
- Rear side corner bumpers
- Rear Vision Camera above the license plate

Radio Frequency

This vehicle may be equipped with driver assistance systems that operate using radio frequency. See *Radio Frequency Statement* ⇨ *327*.

Assistance Systems for Parking or Backing

If equipped, the Rear Vision Camera (RVC), Rear Park Assist (RPA), and Curb View Camera may help the driver park or avoid objects. Always check around the vehicle when parking or backing.

Rear Vision Camera (RVC)

When the vehicle is shifted into R (Reverse), the RVC displays an image of the area behind the vehicle in the infotainment display. The previous screen displays when the vehicle is shifted out of R (Reverse) after a short delay. To return to the previous screen sooner, press Home or Back on the infotainment system, shift into P (Park), or reach a vehicle speed of approximately 12 km/h (8 mph) while in D (Drive).

The camera is above the license plate.

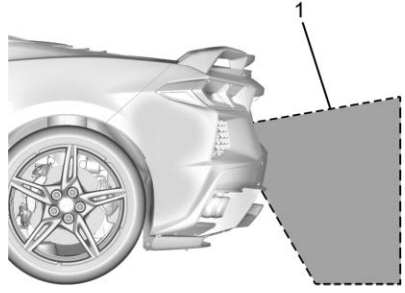

1. View displayed by the camera.

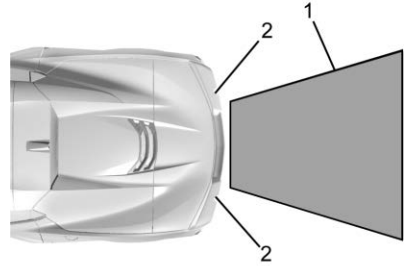

1. View displayed by the camera.
2. Corner of the rear bumper.

Displayed images may be farther or closer than they appear. The area displayed is limited and objects that are close to either corner of the bumper or under the bumper do not display.

⚠ Warning

The camera(s) do not display children, pedestrians, bicyclists, crossing traffic, animals, or any other object outside of the cameras' field of view, below the bumper, or under the vehicle. Shown distances may be different from actual

(Continued)

Warning (Continued)

distances. Do not drive or park the vehicle using only these camera(s). Always check behind and around the vehicle before driving. Failure to use proper care may result in injury, death, or vehicle damage.

Turning the Features On or Off

To turn off the guidance lines:

1. On the infotainment system, touch SETTINGS.
2. Select Rear Camera.
3. Select Guidance Lines and then select Off or On.

When the System Does Not Seem to Work Properly

The RVC system may not work properly or display a clear image if:

- It is dark.
- The sun or the beam of headlamps is shining directly into the camera lens.
- Ice, snow, mud, or anything else builds up on the camera lens. Clean the lens, rinse it with water, and wipe it with a soft cloth.
- The back of the vehicle is damaged. The position and mounting angle of the camera can change or the camera can be affected. Be sure to have the camera and its position and mounting angle checked at your dealer.

Curb View Camera

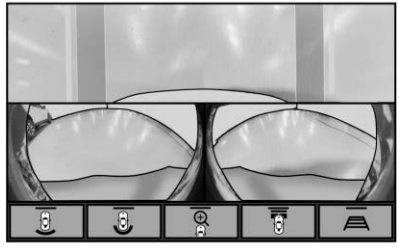

If equipped, a view of the area in front of the vehicle displays in the infotainment display. The display shows a front, top down view at the top and left and right front camera images on the bottom.

The front view shows after shifting from R (Reverse) to a forward gear, or by pressing the camera button on the center console, and when the vehicle is moving forward slower than 12 km/h (8 mph).

The front cameras are on both sides of the front fascia.

Rear Junction View

Displays a rear cross traffic view that shows objects directly to the left and right of the back of the vehicle. Touch Junction View on the infotainment display when a camera view is active.

⚠ Warning

The camera(s) do not display children, pedestrians, bicyclists, crossing traffic, animals, or any other object outside of the cameras' field of view, below the bumper, or under the vehicle. Shown distances may be different from actual distances. Do not drive or park the vehicle using only these camera(s). Always check behind and around the vehicle before driving. Failure to use proper care may result in injury, death, or vehicle damage.

Park Assist

With RPA, as the vehicle backs up at speeds of less than 8 km/h (5 mph), the sensors on the rear bumper may detect objects up to 2.5 m (8 ft) behind the vehicle within a zone 25 cm (10 in) high off the ground and below bumper level. These detection distances may be shorter during warmer or humid weather.

Blocked sensors will not detect objects and can also cause false detections. Keep the sensors clean of mud, dirt, snow, ice, and slush; and clean sensors after a car wash in freezing temperatures.

⚠ Warning

The Park Assist system does not detect children, pedestrians, bicyclists, animals, or objects located below the bumper or that are too close or too far from the vehicle. It is not available at speeds greater than 8 km/h (5 mph). To prevent injury, death, or vehicle damage, even with Park Assist, always check the area around the vehicle and check all mirrors before moving forward or backing.

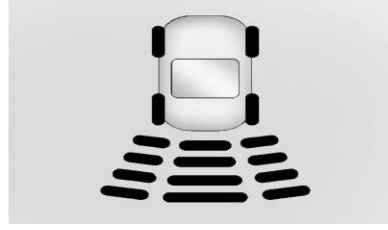

The instrument cluster may have a Park Assist display with bars that show “distance to object” and object location information for RPA. As the object gets closer, more bars light up and the bars change color from yellow to amber to red.

When an object is first detected in the rear, one beep will be heard from the rear. When an object is very close (<0.6 m (2 ft) in the vehicle rear), five beeps will sound from the rear.

Rear Cross Traffic Alert (RCTA) System

If equipped, RCTA displays a red warning triangle with a left or right pointing arrow on the RVC screen to warn of traffic coming from the left or right. This system detects objects coming from up to 20 m (65 ft) from the left or right side of the rear of the vehicle. When an object is detected, three beeps sound from the left or right, depending on the direction of the detected vehicle.

RCTA can be turned on or off through vehicle settings. To view available settings from the infotainment screen, touch Settings > Vehicle > Collision/Detection Systems.

Side Blind Zone Alert (SBZA)

If equipped, the Side Blind Zone Alert (SBZA) system is a lane-changing aid that assists drivers with avoiding crashes that occur with moving vehicles in the side blind zone, or blind spot areas. The SBZA warning display will light up in the corresponding outside side mirror and will flash if the turn signal in corresponding side is on.

⚠ Warning

SBZA does not alert the driver to vehicles rapidly approaching outside of the side blind zones, pedestrians, bicyclists, or animals. It may not provide alerts when changing lanes under all driving conditions. Failure to use proper care when changing lanes may result in injury,

(Continued)

Warning (Continued)

death, or vehicle damage. Before making a lane change, always check mirrors, glance over your shoulder, and use the turn signals.

SBZA Detection Zones

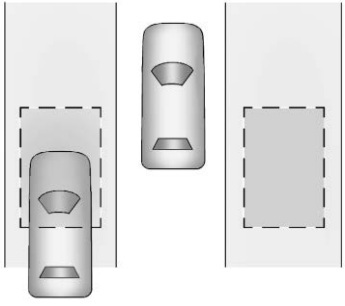

The SBZA sensor covers a zone approximately one lane over from both sides of the vehicle, or approximately 3.5 m (11 ft). The height of the zone is approximately between 0.5 m (1.5 ft) and 2 m (6 ft) off the ground. This zone starts at approximately the middle of the vehicle and goes back 5 m (16 ft).

How the System Works

The SBZA symbol lights up in the side mirrors when the system detects a moving vehicle in the next lane over that is in the side blind zone. This indicates it may be unsafe to change lanes. Before making a lane change, check the SBZA display, check mirrors, glance over your shoulder, and use the turn signals.

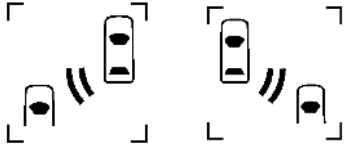

Left Side Mirror Display **Right Side Mirror Display**

When the vehicle is started, both outside mirror SBZA displays will briefly come on to indicate the system is operating. When the vehicle is in a forward gear, the left- or right-side mirror display will light up if a moving vehicle is detected in that blind zone. If the turn signal is activated in the same direction as a detected vehicle, this display will flash as an extra warning not to change lanes.

SBZA can be disabled through vehicle personalization. To view available settings from the infotainment screen, touch Settings > Vehicle > Collision/Detection Systems. If SBZA is disabled by the driver, the SBZA mirror displays will not light up.

When the System Does Not Seem to Work Properly

SBZA displays may not come on when passing a vehicle quickly, for a stopped vehicle. SBZA may alert to objects attached to the vehicle, such as a bicycle, or object extending out to either side of the vehicle. This is normal system operation; the vehicle does not need service.

SBZA may not always alert the driver to vehicles in the side blind zone, especially in wet conditions. The system does not need to be serviced. The system may light up due to guardrails, signs, trees, shrubs, and other non-moving objects. This is normal system operation; the vehicle does not need service.

SBZA may not operate when the SBZA sensors in the left or right corners of the rear bumper are covered with mud, dirt, snow, ice, or slush, or in heavy rainstorms. For cleaning instructions, see "Washing the Vehicle" under *Exterior Care* ⇨ *296*. If the

DIC still displays the system unavailable message after cleaning both sides of the vehicle toward the rear corners of the vehicle, see your dealer.

If the SBZA displays do not light up when vehicles are in the blind zone and the system is clean, the system may need service. Take the vehicle to your dealer.

When SBZA is disabled for any reason other than the driver turning it off, the Side Blind Zone Alert On option will not be available on the personalization menu.

Fuel

Top Tier Fuel

GM recommends the use of TOP TIER Detergent Gasoline to keep the engine clean, reduce engine deposits, and maintain optimal vehicle performance. Look for the TOP TIER Logo or see www.toptiergas.com for a list of TOP TIER Detergent Gasoline marketers and applicable countries.

TOP TIER
Detergent Gasoline

CATEGORIE SUPERIEURE
Essences Détergentes

Recommended Fuel

Premium unleaded gasoline meeting ASTM specification D4814 with a posted octane rating (R+M)/2 of 91 or greater is required. The use of the correct fuel is an important part of the proper maintenance of the vehicle and a condition of the vehicle warranty. If heavy knocking is heard when using gasoline rated at 91 or greater, the engine needs service.

Do not use any fuel labeled E85 or FlexFuel. Do not use gasoline with ethanol levels greater than 15% by volume.

Prohibited Fuels

Caution

Do not use fuels with any of the following conditions; doing so may damage the vehicle and void its warranty:

- For vehicles that are not FlexFuel, fuel labeled greater than 15% ethanol by volume, such as mid-level ethanol blends (16–50% ethanol), E85, or FlexFuel.
- Fuel with any amount of methanol, methylal, ferrocene, and aniline. These fuels can corrode metal fuel system parts or damage plastic and rubber parts.
- Fuel containing metals such as methylcyclopentadienyl manganese tricarbonyl (MMT), which can damage the emissions control system and spark plugs.

(Continued)

Caution (Continued)

- Fuel with a posted octane rating of less than the recommended fuel. Using this fuel will lower fuel economy and performance, and may decrease the life of the emissions catalyst.

Fuels in Foreign Countries

The U.S., Canada, and Mexico post fuel octane ratings in anti-knock index (AKI). For fuel not to use in a foreign country, see *Prohibited Fuels* ⇨ *227*.

Fuel Additives

TOP TIER Detergent Gasoline is highly recommended for use with your vehicle. If your country does not have TOP TIER Detergent Gasoline, add ACDelco Fuel System Treatment Plus–Gasoline to the vehicle's gasoline fuel tank at every oil change or 15 000 km (9,000 mi), whichever occurs first. TOP TIER Detergent Gasoline and ACDelco Fuel System Treatment Plus–Gasoline will help keep your vehicle's engine fuel deposit free and performing optimally.

Filling the Tank

An arrow on the fuel gauge indicates which side of the vehicle the fuel door is on. See *Fuel Gauge* ⇨ *82*.

⚠ Warning

Fuel vapors and fuel fires burn violently and can cause injury or death.

Follow these guidelines to help avoid injuries to you and others:

- Read and follow all the instructions on the fuel pump island.
- Turn off the engine when refueling.
- Keep sparks, flames, and smoking materials away from fuel.
- Do not leave the fuel pump unattended.
- Avoid using electronic devices while refueling.
- Do not re-enter the vehicle while pumping fuel.
- Keep children away from the fuel pump and never let children pump fuel.

(Continued)

Warning (Continued)

- Before touching the fill nozzle, touch a metallic object to discharge static electricity from your body.
- Fuel can spray out if the fill nozzle is inserted too quickly. This spray can happen if the tank is nearly full, and is more likely in hot weather. Insert the fill nozzle slowly and wait for any hiss noise to stop before beginning to flow fuel.

The fuel door unlocks when the vehicle doors are unlocked. See *Remote Key Operation* ⇨ *7*.

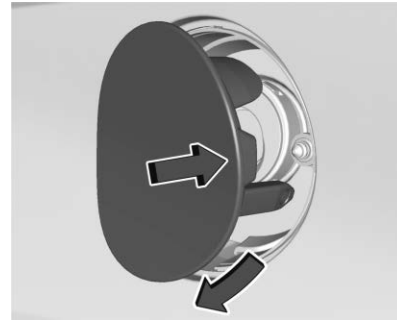

To open the fuel door, push and release the rearward center edge of the door.

The capless refueling system does not have a fuel cap. Fully insert and latch the fill nozzle, begin fueling.

⚠ Warning

Overfilling the fuel tank by more than three clicks of a standard fill nozzle may cause:

- Vehicle performance issues, including engine stalling and damage to the fuel system.
- Fuel spills.
- Under certain conditions, fuel fires.

Be careful not to spill fuel. Wait five seconds after you have finished pumping before removing the fill nozzle. Clean fuel from painted surfaces as soon as possible. See *Exterior Care* ⇨ *296*. Push the fuel door closed until it latches.

⚠ Warning

If a fire starts while you are refueling, do not remove the fill nozzle. Shut off the flow of fuel by shutting off the pump or by notifying the station attendant. Leave the area immediately.

Filling the Tank with a Portable Fuel Container

If the vehicle runs out of fuel and must be filled from a portable fuel container:

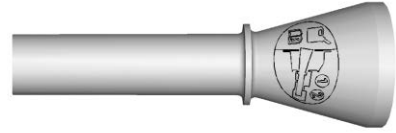

1. Locate the capless funnel adapter.
2. Insert and latch the funnel into the capless fuel system.

⚠ Warning

Attempting to refuel from a portable fuel container without using the funnel adapter may cause fuel spillage and damage the capless fuel system. This could cause a fire. You or others could be badly burned and the vehicle could be damaged.

3. Remove and clean the funnel adapter and return it to the storage location.

Filling a Portable Fuel Container

⚠ Warning

Never fill a portable fuel container while it is in the vehicle. Static electricity discharge from the container can ignite the fuel vapor. You or others could be badly burned and the vehicle could be damaged. To help avoid injury to you and others:

- Dispense fuel only into approved containers.

(Continued)

Warning (Continued)

- Do not fill a container while it is inside a vehicle, in a vehicle's trunk, in a pickup bed, or on any surface other than the ground.
- Bring the fill nozzle in contact with the inside of the fill opening before operating the nozzle. Maintain contact until filling is complete.
- Keep sparks, flames, and smoking materials away from fuel.
- Avoid using electronic devices while pumping fuel.

Trailer Towing

General Towing Information

⚠ Warning

Never tow a trailer with your vehicle. It was not designed or intended to tow a trailer.

Conversions and Add-Ons

Add-On Electrical Equipment

⚠ Warning

The Data Link Connector (DLC) is used for vehicle service and Emission Inspection/ Maintenance testing. See *Malfunction Indicator Lamp (Check Engine Light)* ⇨ *86*. A device connected to the DLC — such as an aftermarket fleet or driver-behavior tracking device — may interfere with vehicle systems. This could affect vehicle operation and cause a crash. Such devices may also access information stored in the vehicle's systems.

Caution

Some electrical equipment can damage the vehicle or cause components to not work and would not be covered by the vehicle warranty. Always check with your dealer before adding electrical equipment.

Add-on equipment can drain the vehicle's 12-volt battery, even if the vehicle is not operating.

The vehicle has an airbag system. Before attempting to add anything electrical to the vehicle, see *Servicing the Airbag-Equipped Vehicle* ⇨ *59* and *Adding Equipment to the Airbag-Equipped Vehicle* ⇨ *59*.

Vehicle Care

General Information
General Information 232
California Perchlorate Materials Requirements 232
Accessories and Modifications 232
Lifting the Vehicle 232

Vehicle Checks
Doing Your Own Service Work 234
Underhood Compartment Overview ... 234
Engine Compartment Overview 235
Engine Oil (5.5L LT6 Engine) 242
Engine Oil (6.2L LT2 Engine) 245
Engine Oil Life System 248
Dual Clutch Transmission Fluid 249
Dual Clutch Transmission Fluid Life System 249
Engine Air Filter Life System 250
Engine Air Cleaner/Filter 251
Cooling System 252
Engine Overheating 255
Washer Fluid 256
Brakes 257
Brake Pad Life System (If Equipped) ... 259
Brake Fluid 260
Battery - North America 261
Park Brake and P (Park) Mechanism Check 262
Wiper Blade Replacement 262
Windshield Replacement 263
Gas Strut(s) 263

Headlamp Aiming
Front Headlamp Aiming 264

Bulb Replacement
LED Lighting 264

Electrical System
Electrical System Overload 264
Fuses and Circuit Breakers 266
Instrument Panel Fuse Block 266
Rear Compartment Fuse Block 268

Wheels and Tires
Tires 271
All-Season Tires 272
Winter Tires 272
Run-Flat Tires 272
Low-Profile Tires 273
Competition Oriented Tires 273
Summer Tires 274
Tire Sidewall Labeling 274
Tire Designations 275
Tire Terminology and Definitions 276
Tire Pressure 278
Tire Pressure for High-Speed Operation 279
Tire Pressure Monitor System 280
Tire Pressure Monitor Operation 281
Tire Inspection 283
Tire Rotation 283
When It Is Time for New Tires 285
Buying New Tires 285
Different Size Tires and Wheels 286
Uniform Tire Quality Grading 287
Wheel Alignment and Tire Balance 288
Wheel Replacement 288
Tire Chains 289
If a Tire Goes Flat 290

Jump Starting
Jump Starting - North America 290

Towing the Vehicle
Transporting a Disabled Vehicle 293
Recreational Vehicle Towing 296

Appearance Care
Exterior Care 296
Interior Care 301
Floor Mats 304

General Information

For service and parts needs, visit your dealer. You will receive genuine GM parts and GM-trained and supported service people.

Genuine GM parts have one of these marks:

California Perchlorate Materials Requirements

Certain types of automotive applications, such as airbag initiators, seat belt pretensioners, and lithium batteries contained in electronic keys, may contain perchlorate materials. Perchlorate Material – special handling may apply. See www.dtsc.ca.gov/hazardouswaste/perchlorate.

Accessories and Modifications

Adding non-dealer accessories or making modifications to the vehicle can affect vehicle performance and safety, including such things as airbags, braking, stability, ride and handling, emissions systems, aerodynamics, durability, Driver Assistance Systems, and electronic systems like antilock brakes, traction control, and stability control. These accessories or modifications could even cause malfunction or damage not covered by the vehicle warranty.

Damage to suspension components caused by modifying vehicle height outside of factory settings will not be covered by the vehicle warranty.

Damage to vehicle components resulting from modifications or the installation or use of non-GM certified parts, including control module or software modifications, is not covered under the terms of the vehicle warranty and may affect remaining warranty coverage for affected parts.

GM Accessories are designed to complement and function with other systems on the vehicle. See your dealer to accessorize the vehicle using genuine GM Accessories installed by a dealer technician.

Also, see *Adding Equipment to the Airbag-Equipped Vehicle* ⇨ *59*.

Lifting the Vehicle

⚠ Warning

Lifting a vehicle can cause an injury. The vehicle can slip off the jack and roll over you or other people. You and they could be badly injured. Find a level place to lift your vehicle. To help prevent the vehicle from moving:

1. Set the parking brake firmly.
2. Put the transmission in P (Park).
3. Turn off the engine.

To be even more certain the vehicle will not move, put blocks in front of and behind the wheels.

⚠ Warning

Getting under a vehicle when it is lifted on a jack is dangerous. If the vehicle slips off the jack, you could be badly injured or killed. Never get under a vehicle when it is supported only by a jack.

⚠ Warning

Raising the vehicle with the jack improperly positioned can damage the vehicle or the vehicle may fall and cause injury to you or others.

If a jack is used to lift the vehicle, follow the instructions that came with the jack, and be sure to use the correct lifting points to avoid damaging the vehicle.

Caution

Lifting the vehicle improperly can damage it and result in costly repairs not covered by the vehicle warranty. To lift the vehicle properly and prevent vehicle damage:

(Continued)

Caution (Continued)

- Be sure to place a block or pad between the jack and the vehicle.
- Lift only in the areas shown in the following illustrations.

For additional information, see your dealer and the service manual.

Caution

The front jack pads must not contact the rocker panels, the front fenders, or the floor pan. If they do, damage may occur.

Lifting from the Front – Frame

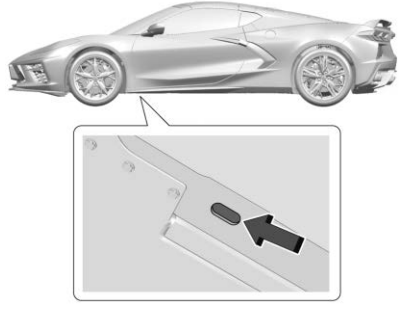

Use only a service jack with a lifting pad diameter of 64 mm (2.5 in) or smaller, and thick enough to make sure the jack does not contact the vehicle body.

Position the service jack and lifting pad under the frame rail shipping slot reinforcement.

Lifting from the Rear – Frame

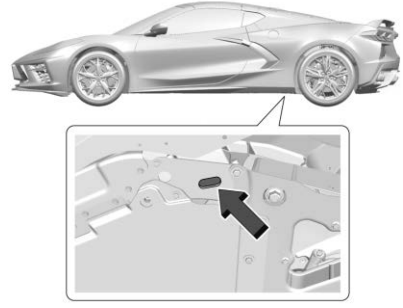

Use only a service jack with a lifting pad diameter of 64 mm (2.5 in) or smaller, and thick enough to make sure the jack does not contact the vehicle body.

Position the service jack and lifting pad under the frame rail shipping slot reinforcement.

For more information, see *Doing Your Own Service Work* ⇨ *234*.

Vehicle Checks

Doing Your Own Service Work

⚠ Warning

It can be dangerous to work on your vehicle if you do not have the proper knowledge, service manual, tools, or parts. Always follow owner's manual procedures and consult the service manual for your vehicle before doing any service work.

If doing some of your own service work, use the proper service manual. It tells you much more about how to service the vehicle than this manual can. To order the proper service manual, see *Publication Ordering Information* ⇨ *327*.

This vehicle has an airbag system. Before attempting to do your own service work, see *Servicing the Airbag-Equipped Vehicle* ⇨ *59*.

If equipped with remote vehicle start, open the hatch/trunk before performing any service work to prevent remote starting the vehicle accidentally. See *Remote Vehicle Start* ⇨ *12*.

Keep a record with all parts receipts and list the mileage and the date of any service work performed. See *Maintenance Records* ⇨ *313*.

Caution

Even small amounts of contamination can cause damage to vehicle systems. Do not allow contaminants to contact the fluids, reservoir caps, or dipsticks.

Underhood Compartment Overview

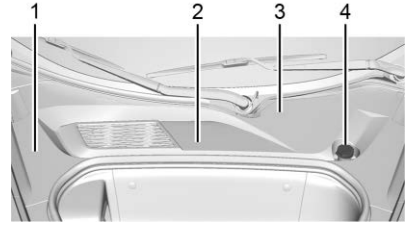

1. Front Lift System Reservoir (Under Cover, if equipped). See *Front Lift System* ⇨ *214*.
2. Battery (Under Cover). See *Battery - North America* ⇨ *261*.
3. Brake Fluid Reservoir (Under Cover). See *Brake Fluid* ⇨ *260*.
4. Windshield Washer Fluid Reservoir. See *Washer Fluid* ⇨ *256*.

Engine Compartment Overview

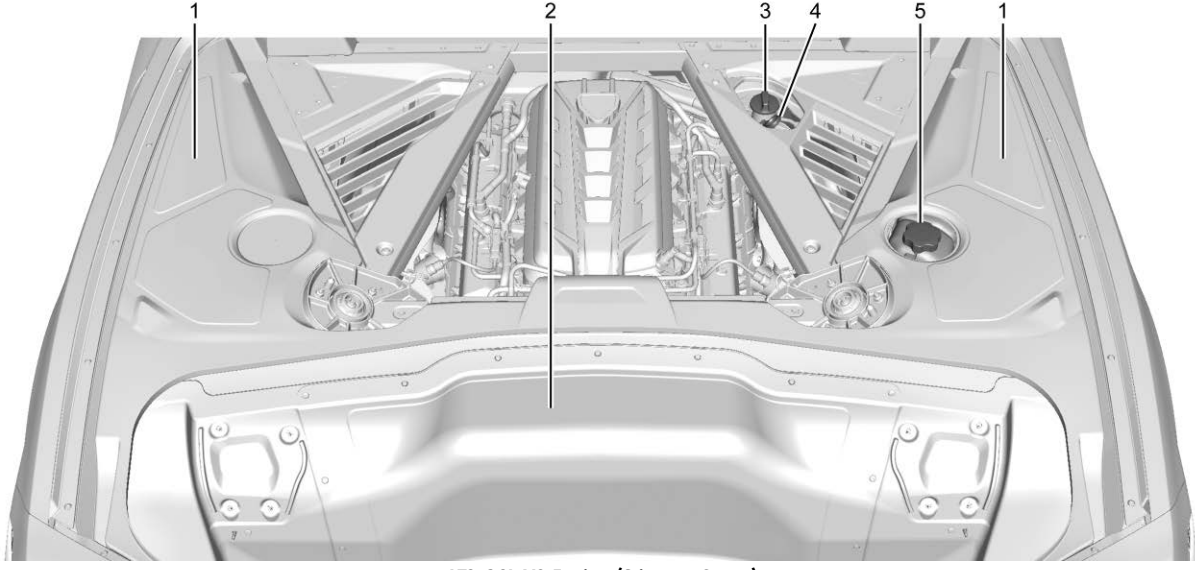

LT2 6.2L V8 Engine (Stingray Coupe)

1. Engine Cooling Fan (Out of View). See *Cooling System* ⇨ *252*.
2. Engine Air Cleaner/Filter (Under Access Panel). See *Engine Air Cleaner/Filter* ⇨ *251*.
3. Dry Sump Engine Oil Tank and Fill Cap. See *Engine Oil (5.5L LT6 Engine)* ⇨ *242* or *Engine Oil (6.2L LT2 Engine)* ⇨ *245*.
4. Engine Oil Dipstick. See *Engine Oil (5.5L LT6 Engine)* ⇨ *242* or *Engine Oil (6.2L LT2 Engine)* ⇨ *245*.
5. Coolant Surge Tank and Pressure Cap. See *Cooling System* ⇨ *252*.

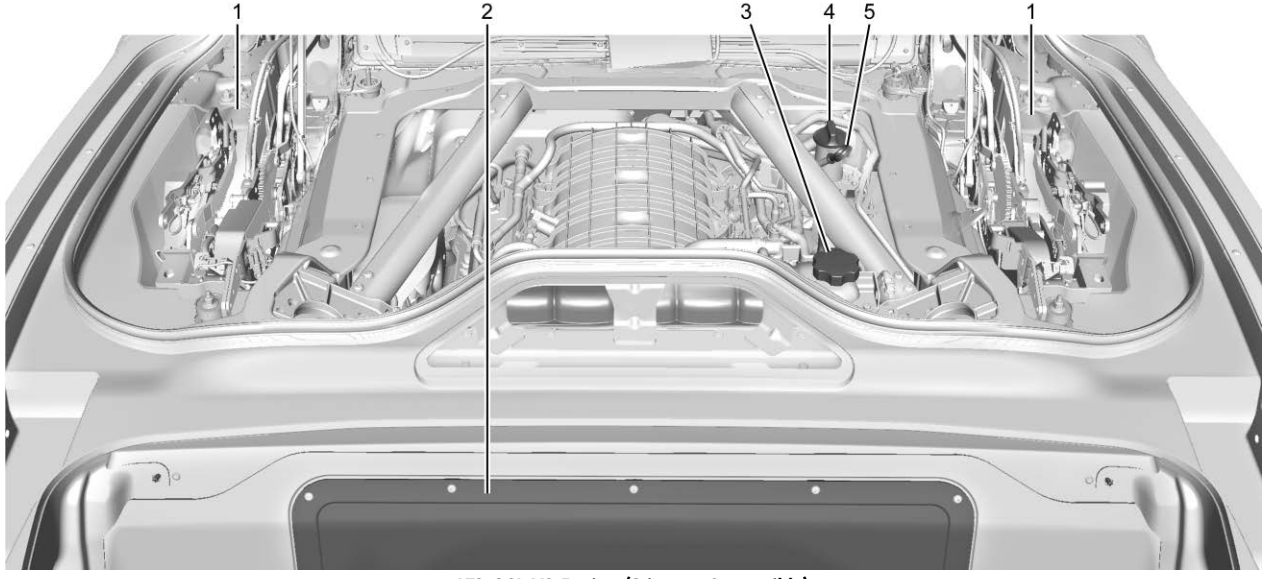

LT2 6.2L V8 Engine (Stingray Convertible)

1. Engine Cooling Fan (Out of View). See *Cooling System* ⇨ *252*.
2. Engine Air Cleaner/Filter (Under Access Panel). See *Engine Air Cleaner/Filter* ⇨ *251*.
3. Coolant Surge Tank and Pressure Cap. See *Cooling System* ⇨ *252*.
4. Dry Sump Engine Oil Tank and Fill Cap. See *Engine Oil (5.5L LT6 Engine)* ⇨ *242* or *Engine Oil (6.2L LT2 Engine)* ⇨ *245*.
5. Engine Oil Dipstick. See *Engine Oil (5.5L LT6 Engine)* ⇨ *242* or *Engine Oil (6.2L LT2 Engine)* ⇨ *245*.

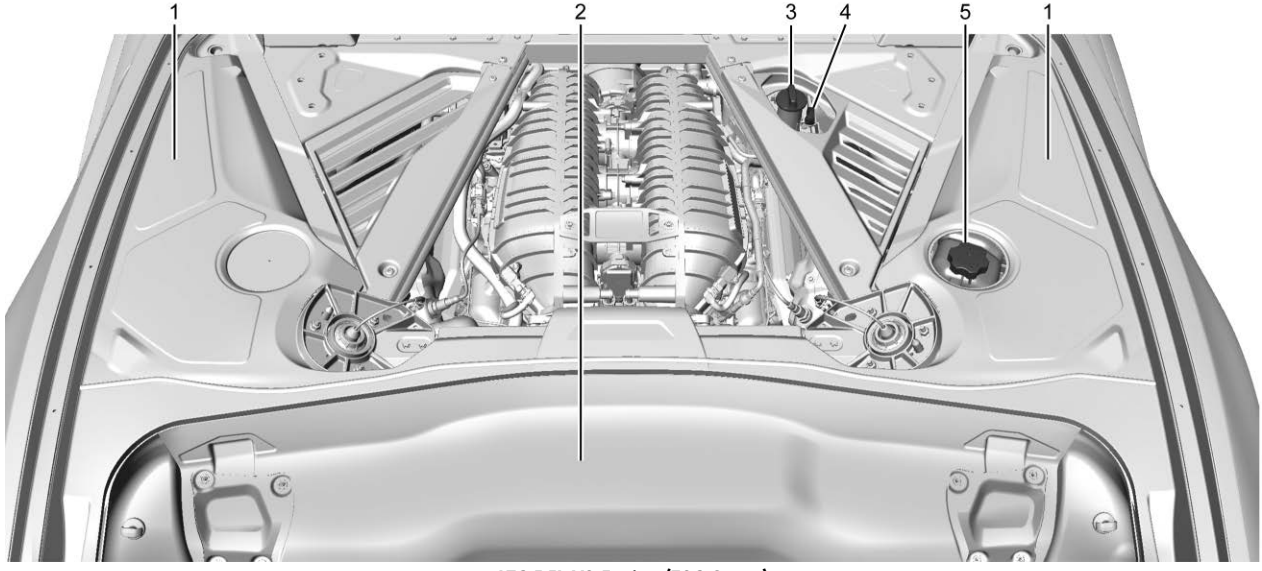

LT6 5.5L V8 Engine (Z06 Coupe)

1. Engine Cooling Fan (Out of View). See *Cooling System* ⇨ *252*.
2. Engine Air Cleaner/Filter (Under Access Panel). See *Engine Air Cleaner/Filter* ⇨ *251*.
3. Dry Sump Engine Oil Tank and Fill Cap. See *Engine Oil (5.5L LT6 Engine)* ⇨ *242* or *Engine Oil (6.2L LT2 Engine)* ⇨ *245*.
4. Engine Oil Dipstick. See *Engine Oil (5.5L LT6 Engine)* ⇨ *242* or *Engine Oil (6.2L LT2 Engine)* ⇨ *245*.
5. Coolant Surge Tank and Pressure Cap. See *Cooling System* ⇨ *252*.

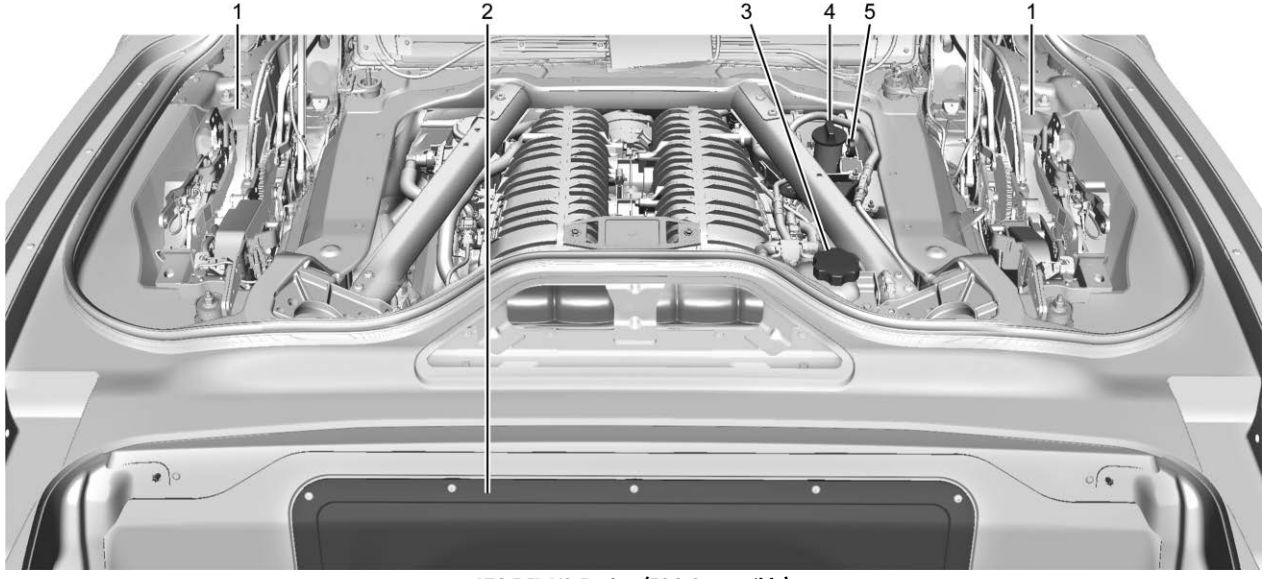

LT6 5.5L V8 Engine (Z06 Convertible)

1. Engine Cooling Fan (Out of View). See *Cooling System* ⇨ *252*.
2. Engine Air Cleaner/Filter (Under Access Panel). See *Engine Air Cleaner/Filter* ⇨ *251*.
3. Dry Sump Engine Oil Tank and Fill Cap. See *Engine Oil (5.5L LT6 Engine)* ⇨ *242* or *Engine Oil (6.2L LT2 Engine)* ⇨ *245*.
4. Engine Oil Dipstick. See *Engine Oil (5.5L LT6 Engine)* ⇨ *242* or *Engine Oil (6.2L LT2 Engine)* ⇨ *245*.
5. Coolant Surge Tank and Pressure Cap. See *Cooling System* ⇨ *252*.

Engine Oil (5.5L LT6 Engine)

To ensure proper engine performance and long life, pay careful attention to engine oil. Follow these important steps:

- Use engine oil approved to the proper specification and of the proper viscosity grade. See "Selecting the Right Engine Oil" later in this section.
- Check the engine oil level regularly and maintain the proper oil level. See "Checking Engine Oil" and "When to Add Engine Oil" later in this section.
- Change the engine oil at the appropriate time. See *Engine Oil Life System* ⇨ *248*.
- Always dispose of engine oil properly. See "What to Do with Used Oil" in this section.

Checking the Engine Oil

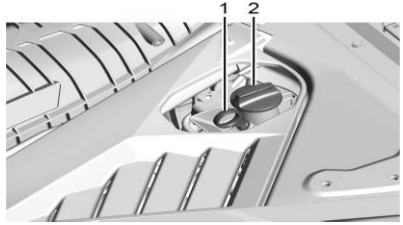

1. Engine Oil Dipstick
2. Engine Oil Fill Cap

Check the engine oil level regularly, every 650 km (400 mi), especially prior to a long trip. To get an accurate reading, the vehicle must be parked on a level ground.

The engine oil dipstick handle is a loop. See *Engine Compartment Overview* ⇨ *235* for the location.

The vehicle has a racetrack-ready dry sump engine lubrication system. This high performance system operates differently than a standard engine lubrication system and requires a special procedure when checking the engine oil level. Follow this procedure closely.

The engine oil level must be checked when the engine is warm. Cold oil level in the dry sump tank may not indicate the actual amount of oil in the system. Engine oil is contained in an external tank, separate from the engine. Under normal operating conditions, the oil pan under the engine does not store any oil. If the vehicle has been parked for an extended period without the engine being started, some oil will seep back into the oil pan. This will reduce the amount of oil held in the dry sump tank and there could be no engine oil on the dipstick. This is normal since the dipstick is designed to read the engine oil level only after the engine has run long enough to reach normal operating temperature. Do not add engine oil based on cold engine dipstick readings. The engine oil level on the dipstick must be checked while the engine is running at idle.

To check the engine oil:

1. Turn the engine on and let it warm up to at least 80 °C (175 °F).
2. Once the engine is warm, check the oil while the engine is running at idle.

⚠ Warning

The engine oil dipstick handle may be hot; it could burn you. Use a towel or glove to touch the dipstick handle.

3. Remove the dipstick and wipe it with a clean lint-free paper towel or a cloth. Re-insert the dipstick and push it all the way in until it stops.
4. Remove the dipstick again and read the level on the cross-hatched area. Re-insert the dipstick and push it all the way in until it stops.
5. Turn the engine off.

When to Add Engine Oil

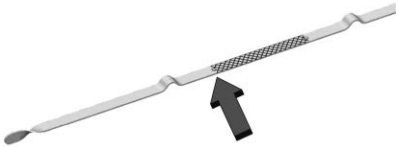

If the oil is below the cross-hatched area at the tip of the dipstick, add 1 L (1 qt) of the recommended oil through the oil fill cap opening in the oil tank fill tube and then recheck the level. See "Selecting the Right Engine Oil" later in this section for the type of oil to use. For engine oil crankcase capacity, see *Capacities and Specifications* ⇨ *315*.

Caution

Do not add too much oil. Oil levels above or below the acceptable operating range shown on the dipstick are harmful to the engine. If the oil level is above the operating range (i.e., the engine has so much oil that the oil level gets above the cross-hatched area that shows the proper operating range), the engine could be damaged. Drain the excess oil or limit driving of the vehicle, and seek a service professional to remove the excess oil.

See *Engine Compartment Overview* ⇨ *235* for the location of the external engine oil tank dipstick and fill cap.

Add enough oil to put the level somewhere in the proper operating range. Push the dipstick all the way back into the oil tank tube when finished.

Changing the Engine Oil and Filter

The vehicle requires a special procedure when changing the engine oil and filter. Follow this procedure closely.

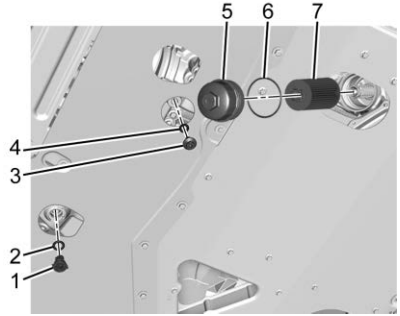

1. Engine Oil Drain Plug
2. Drain Plug O-ring Seal
3. Engine Oil Drain Plug
4. Drain Plug O-ring Seal
5. Engine Oil Filter Cap
6. Engine Oil Filter Cap O-ring Seal
7. Engine Oil Filter Element

To change the engine oil and filter:

1. Run the engine at idle for about 20 seconds to return all of the oil back into the dry sump oil tank.
2. Turn the engine off prior to draining the oil and remove the oil fill cap so the oil tank can breathe while it's draining.

3. Remove the engine oil drain plug (1) from the bottom of the engine oil tank. Drain plug removal will let the oil drain from the external oil tank. Allow the oil to drain.
4. Inspect the drain plug O-ring seal (2) and replace if it is damaged. Reinstall the drain plug into the oil tank by rotating it to a stop.
5. Remove the engine oil drain plug (3) from the bottom of the engine crankcase. Drain plug removal will let the residual oil drain from crankcase sump. Allow the oil to drain.
6. Inspect the drain plug O-ring seal (4) and replace if it is damaged. Reinstall the drain plug into the crankcase sump and tighten them to 25 N•m (18 lb ft).
7. Remove the engine oil filter cap (5) and filter (7) and allow the oil to drain.
8. Install the engine oil filter cap (5) with a new engine oil filter cap seal ring (6) and the new oil filter element (7) and hand tighten. See *Maintenance Replacement Parts* ⇨ *311* for the correct filter.

   Tighten the engine oil filter cap (5) to 25 N•m (18 lb ft).
9. Add oil to the oil tank through the opening in the oil tank. See *Capacities and Specifications* ⇨ *315*.
10. Install the oil fill cap and insert the dipstick until fully seated to a stop, if removed.

⚠ Warning

To help avoid personal injury and/or engine damage, always install the engine oil dipstick and oil fill cap until fully seated to a stop. If not fully seated, oil could escape on to hot exhaust parts and cause a fire.

11. Start the engine and check the oil level as described under "Checking the Engine Oil." previously in this section.

Selecting the Right Engine Oil

Selecting the right engine oil depends on both the proper oil specification and the viscosity grade. See *Recommended Fluids and Lubricants* ⇨ *310*.

Specification

Use engine oils that meet the dexosR Performance Engine Oil specification.

Engine oils that have been approved by GM as meeting the dexosR specification are marked with the dexosR approved logo. See www.gmdexos.com.

GM recommends Mobil 1 engine oils that show the dexosR approved logo.

Caution

Failure to use the recommended engine oil or equivalent can result in engine damage not covered by the vehicle warranty.

Viscosity Grade

Use SAE 5W-50 viscosity grade engine oil.

When selecting an oil of the appropriate viscosity grade, it is recommended to select an oil of the correct specification. See “Specification” previously in this section.

Engine Oil Additives/Engine Oil Flushes

Do not add anything to the oil. The recommended oils meeting the dexos specification are all that is needed for good performance and engine protection.

Engine oil system flushes are not recommended and could cause engine damage not covered by the vehicle warranty.

What to Do with Used Oil

Used engine oil contains certain elements that can be unhealthy for your skin and could even cause cancer. Do not let used oil stay on your skin for very long. Clean your skin and nails with soap and water, or a good hand cleaner. Wash or properly dispose of clothing or rags containing used engine oil. See the manufacturer's warnings about the use and disposal of oil products.

Used oil can be a threat to the environment. If you change your own oil, drain all the oil from the filter before disposal. Never dispose of oil by putting it in the trash or pouring it on the ground, into sewers, or into streams or bodies of water. Recycle it by taking it to a place that collects used oil.

Engine Oil (6.2L LT2 Engine)

To ensure proper engine performance and long life, pay careful attention to engine oil. Follow these important steps:

- Use engine oil approved to the proper specification and of the proper viscosity grade. See "Selecting the Right Engine Oil" later in this section.
- Check the engine oil level regularly and maintain the proper oil level. See "Checking Engine Oil" and "When to Add Engine Oil" later in this section.
- Change the engine oil at the appropriate time. See *Engine Oil Life System* ⇨ *248*.
- Always dispose of engine oil properly. See "What to Do with Used Oil" in this section.

Checking the Engine Oil

1. Engine Oil Dipstick
2. Engine Oil Fill Cap

Check the engine oil level regularly, every 650 km (400 mi), especially prior to a long trip. To get an accurate reading, the vehicle must be parked on a level ground.

The engine oil dipstick handle is a loop. See *Engine Compartment Overview* ⇨ *235* for the location.

The vehicle has a racetrack-ready dry sump engine lubrication system. This high performance system operates differently than a standard engine lubrication system and requires a special procedure when checking the engine oil level. Follow this procedure closely.

The engine oil level must be checked when the engine is warm. Cold oil level in the dry sump tank may not indicate the actual amount of oil in the system. Engine oil is contained in an external tank, separate from the engine. Under normal operating conditions, the oil pan under the engine does not store any oil. If the vehicle has been parked for an extended period without the engine being started, some oil will seep back into the oil pan. This will reduce the amount of oil held in the dry sump tank

and there could be no engine oil on the dipstick. This is normal since the dipstick is designed to read the engine oil level only after the engine has run long enough to reach normal operating temperature. Do not add engine oil based on cold engine dipstick readings. The engine oil level on the dipstick must be checked while the engine is running at idle.

To check the engine oil:

1. Turn the engine on and let it warm up to at least 80 °C (175 °F).
2. Once the engine is warm, check the oil while the engine is running at idle.

⚠ Warning

The engine oil dipstick handle may be hot; it could burn you. Use a towel or glove to touch the dipstick handle.

3. Remove the dipstick and wipe it with a clean lint-free paper towel or a cloth. Re-insert the dipstick and push it all the way in until it stops.
4. Remove the dipstick again and read the level on the cross-hatched area. Re-insert the dipstick and push it all the way in until it stops.
5. Turn the engine off.

When to Add Engine Oil

If the oil is below the cross-hatched area at the tip of the dipstick, add 1 L (1 qt) of the recommended oil through the oil fill cap opening in the oil tank fill tube and then recheck the level. See "Selecting the Right Engine Oil" later in this section for the type of oil to use. For engine oil crankcase capacity, see *Capacities and Specifications* ⇨ *315*.

Caution

Do not add too much oil. Oil levels above or below the acceptable operating range shown on the dipstick are harmful to the engine. If the oil level is above the operating range (i.e., the engine has so much oil that the oil level gets above the cross-hatched area that shows the proper operating range), the engine could be damaged. Drain the excess oil or limit driving of the vehicle, and seek a service professional to remove the excess oil.

See *Engine Compartment Overview* ⇨ *235* for the location of the external engine oil tank dipstick and fill cap.

Add enough oil to put the level somewhere in the proper operating range. Push the dipstick all the way back into the oil tank tube when finished.

Changing the Engine Oil and Filter

The vehicle requires a special procedure when changing the engine oil and filter. Follow this procedure closely.

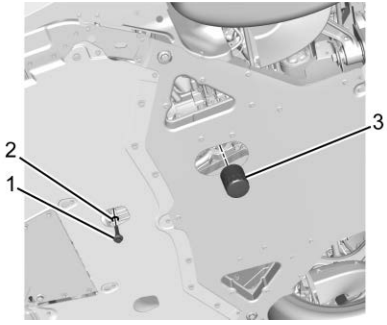

1. Engine Oil Drain Plug
2. O-ring Seal
3. Engine Oil Filter

To change the engine oil and filter:

1. Run the engine at idle for about 20 seconds to return all of the oil back into the dry sump oil tank.
2. Turn the engine off prior to draining the oil.
3. Remove the engine oil drain plug from the bottom of the engine oil pan. Drain plug removal will let the oil drain from the external oil tank and residual oil from the crankcase sump. Allow the oil to drain.
4. Remove the engine oil filter and allow the oil to drain.
5. Inspect the drain plug O-ring seal and replace if it is damaged. Reinstall the drain plug into the oil pan and tighten it to 25 N.m (18 lb ft).
6. Replace the oil filter and tighten it three-quarters to one turn after the gasket makes contact. See *Maintenance Replacement Parts* ⇨ *311* for the correct filter.
7. Remove the oil fill cap from the external engine oil tank.

   Add oil to the oil tank through the opening in the fill tube. See *Capacities and Specifications* ⇨ *315*.
8. Install the oil fill cap and insert the dipstick, if removed.

⚠ Warning

To help avoid personal injury and/or engine damage, always install the engine oil dipstick and oil fill cap until fully seated to a stop. If not fully seated, oil could escape on to hot exhaust parts and cause a fire.

9. Start the engine and check the oil level as described under "Checking the Engine Oil." previously in this section.

Selecting the Right Engine Oil

Selecting the right engine oil depends on both the proper oil specification and the viscosity grade. See *Recommended Fluids and Lubricants* ⇨ *310*.

Specification

Use engine oils that meet the dexosR specification.

Engine oils that have been approved by GM as meeting the dexosR specification are marked with the dexosR approved logo. See www.gmdexos.com.

GM recommends Mobil 1 engine oils that show the dexosR approved logo.

Caution

Failure to use the recommended engine oil or equivalent can result in engine damage not covered by the vehicle warranty.

Viscosity Grade

Use SAE 0W-40 viscosity grade engine oil.

When selecting an oil of the appropriate viscosity grade, it is recommended to select an oil of the correct specification. See "Specification" previously in this section.

Engine Oil Additives/Engine Oil Flushes

Do not add anything to the oil. The recommended oils meeting the dexos specification are all that is needed for good performance and engine protection.

Engine oil system flushes are not recommended and could cause engine damage not covered by the vehicle warranty.

What to Do with Used Oil

Used engine oil contains certain elements that can be unhealthy for your skin and could even cause cancer. Do not let used oil stay on your skin for very long. Clean your skin and nails with soap and water, or a good hand cleaner. Wash or properly dispose of clothing or rags containing used engine oil. See the manufacturer's warnings about the use and disposal of oil products.

Used oil can be a threat to the environment. If you change your own oil, drain all the oil from the filter before disposal. Never dispose of oil by putting it in the trash or pouring it on the ground, into sewers, or into streams or bodies of water. Recycle it by taking it to a place that collects used oil.

Engine Oil Life System

When to Change Engine Oil

This vehicle has a computer that indicates when to change the engine oil and filter. This is based on a combination of factors which include engine revolutions, engine temperature, and miles driven. Based on driving conditions, the mileage at which an oil change is indicated can vary considerably. For the oil life system to work properly, the system must be reset every time the oil is changed.

This vehicle has a racetrack-ready dry sump engine lubrication system. This high performance system operates differently than a standard engine lubrication system and requires a special procedure when changing the engine oil and filter. See *Engine Oil (5.5L LT6 Engine)* ⇨ *242* or *Engine Oil (6.2L LT2 Engine)* ⇨ *245*.

When the system has calculated that oil life has been diminished, it indicates that an oil change is necessary. A CHANGE ENGINE OIL SOON message comes on. Change the oil as soon as possible within the next 1 000 km (600 mi). It is possible that, if driving under the best conditions, the oil life system may not indicate that an oil change is necessary for up to a year. The engine oil and filter must be changed at least once a year and, at this time, the system must be reset. Your dealer has trained service people who will perform this work and reset the system.
It is also important to check the oil regularly over the course of an oil drain interval and keep it at the proper level.

If the system is ever reset accidentally, the oil must be changed at 5 000 km (3,000 mi) since the last oil change. Remember to reset the oil life system whenever the oil is changed.

How to Reset the Engine Oil Life System

Reset the system whenever the engine oil is changed so that the system can calculate the next engine oil change. To reset the system:

1. Scroll through the DIC Info Pages menu until the remaining Engine Oil percentage is displayed. See *Driver Information Center (DIC)* ⇨ *92*.
2. Press and hold the thumbwheel on the DIC while the Oil Life display is active. When prompted, confirm reset. The oil life will change to 100%.

If the CHANGE ENGINE OIL SOON message comes back on when the vehicle is started, the engine oil life system has not reset. Repeat the procedure.

Dual Clutch Transmission Fluid

How to Check Dual Clutch Transmission Fluid

It is not necessary to check the transmission fluid level. A transmission fluid leak is the only reason for fluid loss. If a leak occurs, take the vehicle to the dealer and have it repaired as soon as possible.

The vehicle is not equipped with a transmission fluid level dipstick. There is a special procedure for checking and changing the transmission fluid. Because this procedure is difficult, this should be done at the dealer. Contact the dealer for additional information or the procedure can be found in the service manual. To purchase a service manual, see *Publication Ordering Information* ⇨ *327*.

Caution

Use of the incorrect transmission fluid may damage the vehicle, and the damage may not be covered by the vehicle warranty. Always use the correct transmission fluid. See *Recommended Fluids and Lubricants* ⇨ *310*.

Change the fluid and external canister filter at the proper intervals. See *Maintenance Schedule* ⇨ *306*. Be sure to use the correct fluid. See *Recommended Fluids and Lubricants* ⇨ *310*.

Dual Clutch Transmission Fluid Life System

When to Change the Dual Clutch Transmission Fluid

This vehicle has a computer that indicates when to change the transmission fluid. This is based on a combination of factors which include temperature and miles driven. Based on driving conditions, the mileage at which a fluid change is indicated can vary considerably. For the fluid life system to work properly, the system must be reset every time the fluid is changed. When the system has calculated that fluid life has been diminished, it indicates that a fluid change is necessary. A CHANGE TRANSMISSION FLUID SOON message comes on. Change the fluid as soon as possible within the next 1 000 km (600 mi). Failure to change transmission fluid at required intervals could lead to suboptimal transmission performance. Your dealer has trained service technicians who will change the fluid and reset the system. If the system is ever reset accidentally, the fluid must be changed 72 000 km (45,000 mi) after the last fluid change.

When to Replace the Dual Clutch Transmission Fluid Filter

This vehicle has a computer that indicates when to change the transmission external canister fluid filter. This is based on the number of miles driven as outlined in the Service and Maintenance section. For the fluid filter life system to work properly, the system must be reset every time the filter is replaced. When the system has calculated that the external canister filter is near the mileage interval, a REPLACE TRANSMISSION OIL FILTER SOON message comes on. Replace the external canister filter before the indicator reaches 0%.

Failure to replace the transmission filter at required intervals could lead to suboptimal transmission performance. Your dealer has trained service technicians who will replace the external canister filter and reset the system. If the system is ever reset accidentally, the filter should be replaced according to the service intervals indicated in the Service and Maintenance section until the next filter change. If the next filter change is the first, follow the service interval until the second filter change, resetting the filter life system at each filter change.

How to Reset the Dual Clutch Transmission Fluid and Filter Life System

Reset the respective system whenever the transmission fluid or external canister filter is replaced so that the system can calculate the next service interval.

To reset:

1. Place the vehicle in P (Park).
2. Select Transmission Fluid Life or Transmission Oil Filter Life on the DIC menu. See *Driver Information Center (DIC)* ⇨ *92*.
3. Press the thumbwheel to move to the Reset submenu. Select Reset Transmission Fluid or Reset Transmission Oil Filter. A confirmation page will be displayed, press the thumbwheel again to confirm the reset.
4. When the Transmission Fluid/Filter Life System is successfully reset, 100% remaining life will be displayed.

Engine Air Filter Life System

If equipped, this feature provides the engine air filter's remaining life and best timing for a change. The timing to change an engine air filter depends on driving and environmental conditions.

When to Change Engine Air Filter

When the Driver Information Center (DIC) displays a message to replace the engine air filter at the next oil change, follow this timing.

When the DIC displays a message to replace the engine air filter soon, replace the engine air filter at the earliest convenience.

The system must be reset after the engine air filter is changed.

If the DIC displays a message to check the engine air filter system, see your dealer.

How to Reset Engine Air Filter Life System

Reset the system whenever the engine air filter is replaced so that the system can calculate the next engine air filter change.

To reset:

1. Place the vehicle in P (Park).
2. Display the Air Filter Life on the DIC. See *Driver Information Center (DIC)* ⇨ *92*.
3. Press the thumbwheel on the steering wheel to move to the Reset/Disable display area. Select Reset and press the thumbwheel for several seconds.
4. Press the thumbwheel to confirm reset.

Engine Air Cleaner/Filter

See *Engine Compartment Overview* ⇨ *235* for the location of the engine air cleaner/filter.

Caution
If water is sprayed and enters the engine air cleaner/filter intake and housing, the engine could be damaged. The repairs would not be covered by the vehicle warranty.

When to Inspect the Engine Air Cleaner/Filter

For intervals on changing and inspecting the engine air cleaner/filter, see *Maintenance Schedule* ⇨ *306*.

How to Inspect/Replace the Engine Air Cleaner/Filter

Do not start the engine or have the engine running with the engine air cleaner/filter housing open. Before removing the engine air cleaner/filter, make sure that the engine air cleaner/filter housing and nearby components are free of dirt and debris. Do not clean the engine air cleaner/filter or components with water or compressed air.

To inspect or replace the air cleaner/filter:

1. Remove the convenience net, if equipped.

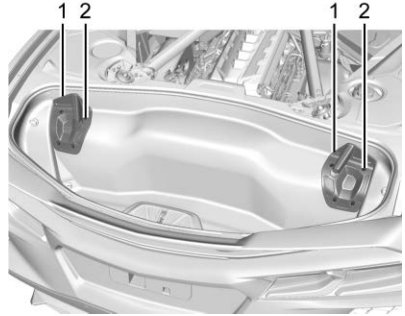

2. Remove the four lift off bracket bolts (2) to remove the brackets (1).

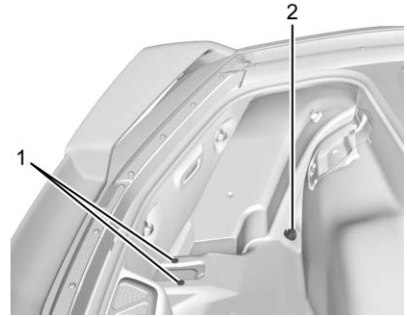

3. Remove the convenience net hooks (2) and plastic retainers (1).
4. Remove the carpet.

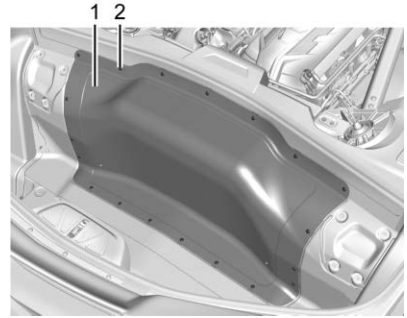

5. Remove the rear compartment access panel screws (2) and panel (1).

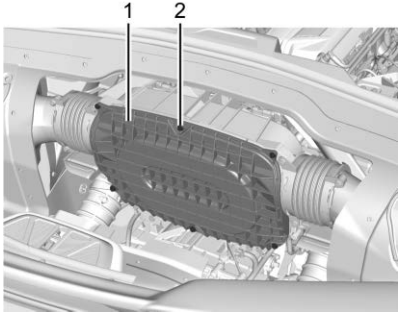

6. Remove the air cleaner cover screws (2) and cover (1).

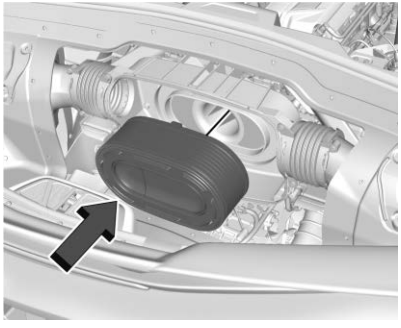

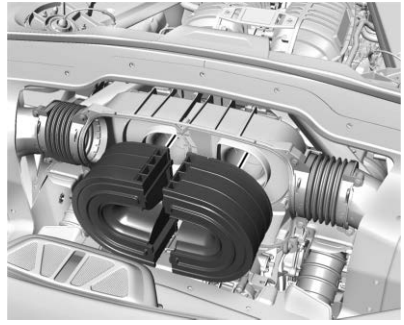

7. Remove the air cleaner/filter(s) (top image LT2 engine) (bottom image LT6 engine).

⚠ Warning

If part replacement is necessary, the part must be replaced with one of the same part number or with an equivalent part. Use of a replacement part without the same fit, form, and function may result in personal injury or damage to the vehicle.

8. Inspect or replace the air cleaner/filter.
9. Reverse Steps 2–7 to replace the air cleaner/filter.

⚠ Warning

Operating the engine with the air cleaner/filter off can cause you or others to be burned. Use caution when working on the engine. Do not start the engine or drive the vehicle with the air cleaner/filter off, as flames may be present if the engine backfires.

Caution

If the air cleaner/filter is off, dirt can easily get into the engine, which could damage it. Always have the air cleaner/filter in place when driving.

Cooling System

The cooling system allows the engine to maintain the correct working temperature.

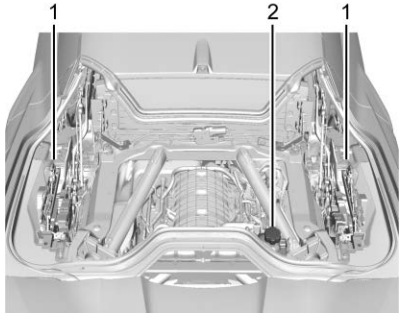

Convertible

1. Engine Cooling Fans (Out of View)
2. Coolant Surge Tank with Pressure Cap

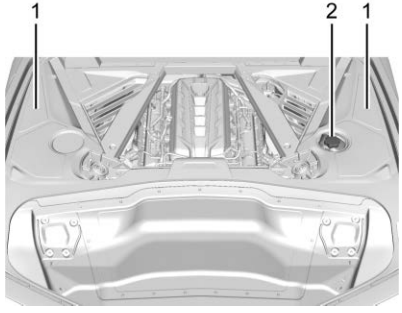

Coupe

1. Engine Cooling Fans (Out of View)
2. Coolant Surge Tank with Pressure Cap

⚠ Warning

An underhood electric fan can start up even when the engine is not running and can cause injury. Keep hands, clothing, and tools away from any underhood electric fan.

⚠ Warning

Do not touch heater or radiator hoses, or other engine parts. They can be very hot and can burn you. Do not run the engine if there is a leak; all coolant could leak out. That could cause an engine fire and can burn you. Fix any leak before driving the vehicle.

Engine Coolant

The cooling system in the vehicle is filled with DEX-COOL engine coolant. See *Recommended Fluids and Lubricants* ⇨ *310*. The fluid requires changing at certain intervals. See *Maintenance Schedule* ⇨ *306*.

The following explains the cooling system and how to check and add coolant when it is low. If there is a problem with engine overheating, see *Engine Overheating* ⇨ *255*.

What to Use

⚠ Warning

Plain water, or other liquids such as alcohol, can boil before the proper coolant mixture will. With plain water or the wrong mixture, the engine could get too hot but there would not be an overheat warning. The engine could catch fire and you or others could be burned.

Use a mixture of 40% DEX-COOL coolant and 60% clean, drinkable water. If using this mixture, nothing else needs to be added. This mixture:

- Gives freezing protection down to −28 °C (−18 °F), outside temperature.
- Gives boiling protection up to 129 °C (265 °F), engine temperature.
- Protects against rust and corrosion.
- Will not damage aluminum parts.
- Helps keep the proper engine temperature.

Caution

Do not use anything other than a mix of DEX-COOL coolant that meets GM Standard GMW3420 and clean, drinkable water. Anything else can cause damage to the engine cooling system and the vehicle, which would not be covered by the vehicle warranty.

Never dispose of engine coolant by putting it in the trash, pouring it on the ground, or into sewers, streams, or bodies of water. Have the coolant changed by an authorized service center, familiar with legal requirements regarding used coolant disposal. This will help protect the environment and your health.

If ambient temperatures are anticipated below −28 °C (−18 °F), make sure a proper mixture ratio of 50% DEX-COOL coolant and 50% clean, drinkable water is used.

Checking Coolant

Be sure the cooling system is cool and that the vehicle is on a level surface.

Check to see if coolant is visible in the coolant surge tank. If the coolant inside the coolant surge tank is boiling, do not do anything else until it cools down. If coolant is visible but the coolant level is not at or above the cold fill line, add a mixture of 40% DEX-COOL coolant and 60% clean, drinkable water at the coolant recovery tank, but be sure the cooling system is cool before this is done. See *Engine Overheating* ⇨ *255*.

The surge tank is in the engine compartment. See *Engine Compartment Overview* ⇨ *235*.

When the engine is cold, the coolant level should be at the COLD FILL indicator in the coolant surge tank.

When the engine is hot, the level could be higher than the COLD FILL indicator. If the coolant is below the COLD FILL indicator when the engine is hot, there could be a leak in the cooling system.

If the coolant is low, add the coolant or take the vehicle to your dealer for service.

How to Add Coolant to the Coolant Surge Tank

⚠ Warning

Spilling coolant on hot engine parts can burn you. Coolant contains ethylene glycol and it will burn if the engine parts are hot enough.

⚠ Warning

Steam and scalding liquids from a hot cooling system are under pressure. Turning the pressure cap, even a little, can cause them to come out at high speed and you could be burned. Never turn the cap when the cooling system, including the pressure cap, is hot. Wait for the cooling system and pressure cap to cool.

If coolant is needed, be sure the cooling system is cool, then add the proper DEX-COOL coolant mixture directly to the surge tank.

1. Open the Hatch/Trunk. See *Hatch (Trunk)* ⇨ *19*.

2. When the cooling system, including the coolant surge tank pressure cap and engine, is no longer hot, remove the pressure cap.

   Turn the pressure cap slowly counterclockwise about one-quarter turn and then stop.

   If a hiss is heard, wait for that to stop. A hiss means there is still some pressure left.

3. Keep turning the pressure cap slowly, and remove it.

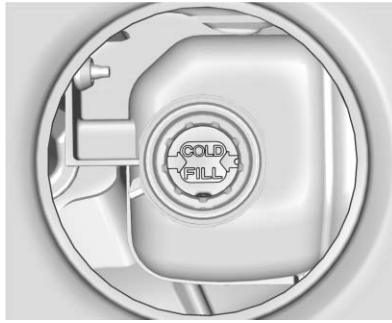

4. Fill the coolant surge tank with the proper mixture until the level inside stabilizes at the COLD FILL indicator in the surge tank.
5. With the coolant surge tank pressure cap off, start the engine and let it run until the engine is hot.

   By this time, the coolant level inside the coolant surge tank may be lower. If the level is lower, add more of the proper mixture to the coolant surge tank until the level stabilizes at the COLD FILL indicator in the coolant surge tank.

6. Replace the pressure cap tightly.
7. Verify coolant level after the engine is shut off and the coolant is cold.
   If necessary, repeat coolant fill procedure Steps 3–7.

   If the coolant still is not at the proper level when the system cools down again, see your dealer.

Caution

If the pressure cap is not tightly installed, coolant loss and engine damage may occur. Be sure the cap is properly and tightly secured.

Engine Overheating

The vehicle has several indicators to warn of engine overheating.

There is an engine coolant temperature gauge on the instrument cluster. See *Engine Coolant Temperature Gauge* ⇨ *83*. The vehicle may also display a message on the Driver Information Center (DIC).

If the decision is made not to lift the hatch but to get service help right away, see *Roadside Assistance Program* ⇨ *322*.

If the decision is made to lift the hatch, make sure the vehicle is parked on a level surface.

Then check to see if the engine cooling fans are running. There are two cooling fans located in the front (one at each corner) and two cooling fans in the rear (one on each side of the engine). If the engine is overheating, the fans should be running. If they are not, do not continue to run the engine, and have the vehicle serviced.

Caution

Do not run the engine if there is a leak in the engine cooling system. This can cause a loss of all coolant and can damage the system and vehicle. Have any leaks fixed right away.

If Steam Is Coming from the Engine

⚠ Warning

Steam and scalding liquids from a hot cooling system are under pressure. Turning the pressure cap, even a little, can cause them to come out at high speed and you could be burned. Never turn the cap when the cooling system, including the pressure cap, is hot. Wait for the cooling system and pressure cap to cool.

If Steam Is Coming from the Engine Compartment with no Overheat Warning

Water from rain and car washes could enter the engine compartment and contact hot surfaces. If steam is coming from the engine compartment with no accompanying overheat warning, no service is needed.

If No Steam Is Coming from the Engine

If an engine overheat warning is displayed but no steam can be seen or heard, the problem may not be too serious. Sometimes the engine can get a little too hot when the vehicle:

- Climbs a long hill on a hot day.
- Stops after high-speed driving.
- Idles for long periods in traffic.

If the overheat warning is displayed with no sign of steam:

1. Turn the air conditioning off.
2. Turn the heater on to the highest temperature and to the highest fan speed. Open the windows as necessary.
3. When it is safe to do so, pull off the road, shift to P (Park) or N (Neutral), and let the engine idle.

If the engine coolant temperature gauge is no longer in the shaded area or an overheat warning no longer displays, the vehicle can be driven. Continue to drive the vehicle slowly for about 10 minutes. Keep a safe vehicle distance from the vehicle in front. If the warning does not come back on, continue to drive normally and have the cooling system checked for proper fill and function.

If the warning continues, pull over safely, and park the vehicle right away.

If there is no sign of steam, idle the engine for three minutes while parked. If the warning is still displayed, turn off the engine until it cools down.

Washer Fluid

What to Use

When the vehicle needs windshield washer fluid, be sure to read the manufacturer instructions before use. If the vehicle will be operating in an area where the temperature may fall below freezing, use a fluid that has sufficient protection against freezing.

Adding Washer Fluid

1. Open the hood. See *Hood* ⇨ *17*.

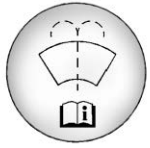

2. Open the cap with the washer symbol on it. Add washer fluid until the tank is full.

Caution

- Do not use washer fluid that contains any type of water repellent coating. This can cause the wiper blades to chatter or skip.
- Do not use engine coolant (antifreeze) in the windshield washer. It can damage the windshield washer system and paint.
- Do not mix water with ready-to-use washer fluid. Water can cause the solution to freeze and damage the washer fluid tank and other parts of the washer system.

(Continued)

Caution (Continued)

- When using concentrated washer fluid, follow the manufacturer instructions for adding water.
- Fill the washer fluid tank only three-quarters full when it is very cold. This allows for fluid expansion if freezing occurs, which could damage the tank if it is completely full.

Brakes

Disc brake linings have built-in wear indicators that make a high-pitched warning sound when the brake linings are worn and new linings are needed. The sound can come and go or can be heard all the time when the vehicle is moving, except when applying the brake pedal firmly.

⚠ Warning

The brake wear warning sound means that soon the brakes will not work well. That could lead to a crash. When the brake wear warning sound is heard, have the vehicle serviced.

Caution

Continuing to drive with worn-out brake linings could result in costly brake repairs.

Properly torqued wheel nuts are necessary to help prevent brake pulsation. When tires are rotated, inspect brake linings for wear and evenly tighten wheel nuts in the proper sequence to torque specifications. See *Capacities and Specifications* ⇨ *315*.

Brake linings should be replaced as complete axle sets.

Brake Squeal and Brake Dust

Some driving conditions or climates can cause a brake squeal when the brakes are first applied, clearing up following several applies. This does not mean something is wrong with the brakes.

Vehicles equipped with high performance brake systems provide superior fade resistance but will produce increased brake squeal and brake dust on the wheels and calipers as compared to standard brake linings. This is normal.

To help reduce squeal, the brake pads are treated with an anti-squeal paste that may need to be reapplied periodically as part of normal vehicle maintenance. The anti-squeal paste will dissipate over time. Also, the use of wheel cleaners or power washers directly on the brake calipers may remove the anti-squeal paste from the brake pads. It may be necessary to reapply the anti-squeal paste if it is removed during cleaning.

If brake squeal is excessive, the anti-squeal paste should be reapplied. The anti-squeal paste should always be reapplied whenever the brake pads are removed or replaced. See your dealer for service.

Brake Pedal Travel

See your dealer if the brake pedal does not return to normal height, or if there is a rapid increase in pedal travel. This could be a sign that brake service may be required.

Replacing Brake System Parts

Always replace brake system parts with new, approved replacement parts. If this is not done, the brakes may not work properly. The braking performance can change in many ways if the wrong brake parts are installed or if parts are improperly installed.

The Brake Fade Warning Assist system is designed for use with the factory-installed brake pads or GM-approved replacement pads. If the brake pads on the vehicle need to be replaced, use GM-approved brake pads. If this is not done, the brake fade warning system may not function properly.

High Performance Brake Lining Car Wash and Extended Parking Care

If equipped with high performance brake components, binding or clunking may be noticeable after extended parking or in cold weather when the brakes have been wet, such as when driving in the rain or after a car wash. The clunking is normal for brakes with high performance brake linings and does not affect the operation of the brakes. When driving, normal braking will allow for the brakes to feel smooth and the clunking to go away. If the vehicle is washed before overnight parking or long term storage, drive it and apply the brakes several times to thoroughly dry the brakes

Brake Rotor Wear (Z06/Z07 with J57 Carbon Ceramic Rotors)

Vehicles with J57 have carbon ceramic brake rotors. The rotors should be visually inspected whenever the brake pads are replaced. Carbon ceramic brake rotors also need to be weighed before brake pads are replaced to confirm that the rotor mass is greater than the wear-out mass printed on the rotor. The rotor can be reused if the weight of the rotor is above the mass limit. Carbon ceramic brake rotors inspection and weighing methods can be found in the service manual.

Z51/Z06 Cast Iron Rotor System Brake Burnish Procedure for Corrosion Cleanup

Corrosion spotting and grooving on the brake rotor surface may appear after the vehicle sits for an extended period of time, especially in high humidity. This corrosion may result in brake pulsation and noise. To help restore optimal braking performance and reduce noise, complete the following procedure:

Caution

Performing the brake burnish procedure on a base brake system can result in brake damage.

Perform this procedure only on dry pavement, in a safe manner, and in compliance with all local and state ordinances/laws regarding motor vehicle operation.

Caution

The new vehicle break-in period should be completed before performing the brake burnishing procedure or damage may occur to the powertrain/engine. See *New Vehicle Break-In* ⇨ *189*.

Caution

Brake fade can occur during this burnish procedure and can cause brake pedal travel and force to increase. This could extend stopping distance until the brakes are fully burnished.

Completing the following procedure as instructed will not damage the brakes. The brake pads may smoke and produce an odor. The braking force and pedal travel may increase. After the procedure, the brake pads may appear white at the rotor contact.

1. Using the Friction Bubble gauge, apply the brakes 10 times starting at 100 km/h (60 mph) to 50 km/h (30 mph) while decelerating at 0.4g. This is a medium brake application. Drive for at lest 0.5 km (0.3 mi) between applying the brakes.
2. If further cleanup of the brake discs is needed, repeat this procedure with 0.7g applications.

As with all high performance brake systems, some amount of brake squeal is normal.

Brake Pad Life System (If Equipped)

When to Change Brake Pads

If equipped, this system estimates the remaining life of the front and rear brake pads. Brake Pad Life is displayed in the Driver Information Center (DIC), along with a percentage for each axle. The system must be reset every time the brake pads are changed.

When the system has determined that the brake pads need to be replaced, a message displays, which may include mileage remaining.

Brake pads should always be replaced as complete axle sets.

How to Reset the Brake Pad Life System

The system will automatically detect when significantly worn brake pads are replaced. When the ignition is turned on after new pads and wear sensors are installed, a message will display. Follow the prompts to reset the system.

The brake pad life system can also be manually reset:

1. Display Brake Pad Life on the DIC. See *Driver Information Center (DIC)* ⇨ *92*.
2. Select the Brake Pad Life menu.
3. Select front or rear pads as appropriate.
4. Select YES on the confirmation message. Repeat for the pads on the other axle if they were also replaced.

How to Disable the Brake Pad Life System

The brake pad life system can be turned off. This may be necessary if aftermarket brake pads without wear sensors are installed. When the system is turned off, the front and rear brake pad life percentages will not display. However, the built-in wear indicators that make a high-pitched warning sound when the brake pads are worn can still determine when the pads should be replaced. See *Brakes* ⇨ *257*.

To turn off the brake pad life system:

1. Display Brake Pad Life on the DIC. See *Driver Information Center (DIC)* ⇨ *92*.
2. Select the Brake Pad Life menu.
3. Select DISABLE.

To turn the brake pad life system back on, follow the above steps but select ENABLE in Step 2.

Electronic Brake Pad Sensor System (Z06/Z07 with J57 Carbon Ceramic Brake Rotors)

The brake pads have electronic brake pad wear sensors, when the brake pads need to be replaced, a message displays in the Driver Information Center (DIC) which says “Service Brakes Worn”.

When the message displays, install new brake pads and brake pad wear sensors on the vehicle.

When the ignition is turned on after new brake pads and brake pad wear sensors are installed, the message should no longer display.

The brake pad sensor system can only be reset by replacing the brake pads and brake pad wear sensors.

Brake Fluid

The brake master cylinder reservoir is filled with GM approved DOT 4 brake fluid as indicated on the reservoir cap. See *Underhood Compartment Overview* ⇨ *234* for the location of the reservoir.

Checking Brake Fluid

With the vehicle in P (Park) on a level surface, the brake fluid level should be between the minimum and maximum marks on the brake fluid reservoir.

There are only two reasons why the brake fluid level in the reservoir may go down:

- Normal brake lining wear. When new linings are installed, the fluid level goes back up.
- A fluid leak in the brake hydraulic system. Have the brake hydraulic system fixed. With a leak, the brakes will not work well.

Always clean the brake fluid reservoir cap and the area around the cap before removing it.

Do not top off the brake fluid. Adding fluid does not correct a leak. If fluid is added when the linings are worn, there will be too much fluid when new brake linings are installed. Add or remove fluid, as necessary, only when work is done on the brake hydraulic system.

Caution

If too much brake fluid is added, the brake fluid can spill and cause vehicle damage, including damage to electrical components and surfaces. Add brake fluid only when work is done on the brake hydraulic system.

When the brake fluid falls to a low level, the brake warning light comes on. See *Brake System Warning Light* ⇨ *87*.

Brake fluid absorbs water over time which degrades the effectiveness of the brake fluid. Replace brake fluid at the specified intervals to prevent increased stopping distance. See *Maintenance Schedule* ⇨ *306*.

What to Add

Use only GM approved DOT 4 brake fluid from a clean, sealed container. See *Recommended Fluids and Lubricants* ⇨ *310*.

⚠ Warning

The wrong or contaminated brake fluid could result in damage to the brake system. This could result in the loss of braking leading to a possible injury. Always use the proper GM approved brake fluid.

Caution

If brake fluid is spilled on the vehicle's painted surfaces, the paint finish can be damaged. Immediately wash off any painted surface.

Battery - North America

The original equipment battery is maintenance free. Do not remove the cap and do not add fluid.

Refer to the replacement number on the original battery label when a new battery is needed. For battery replacement, see your dealer.

⚠ Warning

WARNING: Battery posts, terminals and related accessories can expose you to chemicals including lead and lead compounds, which are known to the State of California to cause cancer and birth defects or other reproductive harm. Wash hands after handling. For more information go to www.P65Warnings.ca.gov.

See *California Proposition 65 Warning* ⇨ *1*.

Vehicle Storage

⚠ Warning

Batteries have acid that can burn you and gas that can explode. You can be badly hurt if you are not careful. Always wear eye protection. See *Jump Starting - North America* ⇨ *290* for tips on working around a battery without getting hurt.

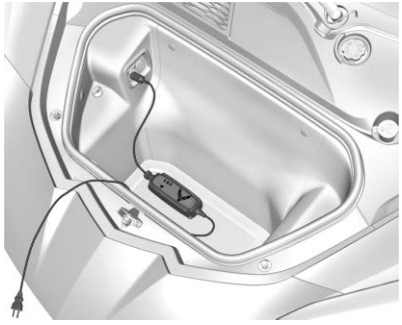

Some vehicles have a battery maintainer package. Follow the instructions provided with the battery maintainer package to keep the battery charged when the vehicle is not in use. Plug the battery maintainer into the underhood accessory power outlet only.

For vehicles without a battery maintainer, see the following information:

Infrequent Usage: Remove the black, negative (–) cable from the battery to keep the battery from running down.

See “Window Indexing” under *Power Windows* ⇨ *28*.

Extended Storage: It is recommended that the battery maintainer package be used. However, if not, remove the black, negative (–) cable from the battery. All vehicle memory settings will need to be reset when battery power is restored.

Park Brake and P (Park) Mechanism Check

⚠ Warning

When you are doing this check, the vehicle could begin to move. You or others could be injured and property could be damaged. Make sure there is room in front of the vehicle in case it begins to roll. Be ready to apply the regular brake at once should the vehicle begin to move.

Park on a fairly steep hill, with the vehicle facing downhill. Keeping your foot on the regular brake, set the parking brake.

- To check the parking brake's holding ability: With the engine running and the transmission in N (Neutral), slowly remove foot pressure from the regular brake pedal. Do this until the vehicle is held by the parking brake only.
- To check the P (Park) mechanism's holding ability: With the engine running, shift to P (Park). Then release the parking brake followed by the regular brake.

Contact your dealer if service is required.

Wiper Blade Replacement

Windshield wiper blades should be inspected for wear and cracking.

Replacement blades come in different types and are removed in different ways. For proper type and length, see *Maintenance Replacement Parts* ⇨ *311*.

To replace the windshield wiper blade:

1. Pull the windshield wiper assembly away from the windshield.

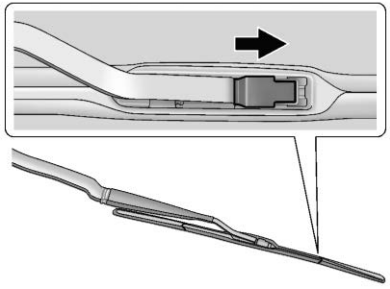

2. Lift up on the latch in the middle of the wiper blade where the wiper arm attaches.
3. With the latch open, pull the wiper blade down toward the windshield far enough to release it from the J-hooked end of the wiper arm.
4. Remove the wiper blade.

   Allowing the wiper blade arm to touch the windshield when no wiper blade is installed could damage the windshield. Any damage that occurs would not be covered by the vehicle warranty. Do not allow the wiper blade arm to touch the windshield.
5. Reverse Steps 1–3 for wiper blade replacement.

Windshield Replacement

HUD System

The windshield is part of the HUD system. If the windshield needs to be replaced, be sure to get one that is designed for HUD or the HUD image may look out of focus.

Driver Assistance Systems

If the windshield needs to be replaced and the vehicle is equipped with a front camera sensor for the Driver Assistance Systems, a GM replacement windshield is recommended. The replacement windshield must be installed according to GM specifications for proper alignment. If it is not, these systems may not work properly, they may display messages, or they may not work at all. See your dealer for proper windshield replacement.

Acoustic Windshield

The vehicle is equipped with an acoustic windshield. If the windshield needs to be replaced be sure to get an acoustic windshield so you will continue to have the benefits an acoustic windshield can provide.

Gas Strut(s)

Your vehicle may be equipped with gas strut(s) to provide assistance in lifting and holding open the hood/trunk/liftgate system in full open position.

⚠ Warning

If the gas struts that hold open the hood, trunk, and/or liftgate fail, you or others could be seriously injured. Take the vehicle to your dealer for service immediately. Visually inspect the gas struts for signs of wear, cracks, or other damage periodically. Check to make sure the hood/trunk/liftgate is held open with enough force. If struts are failing to hold the hood/trunk/liftgate, do not operate. Have the vehicle serviced.

Caution

Do not apply tape or hang any objects from gas struts. Also do not push down or pull on gas struts. This may cause damage to the vehicle.

See *Maintenance Schedule* ⇨ *306*.

Hood

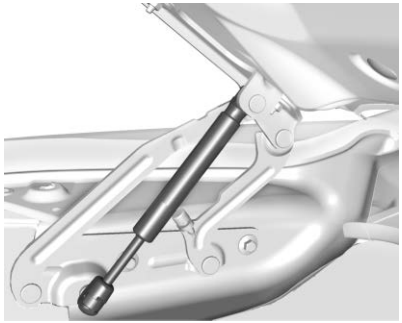

Trunk

Liftgate

Headlamp Aiming

Front Headlamp Aiming

Headlamp aim has been preset and should need no further adjustment.

If the vehicle is damaged in a crash, the headlamp aim may be affected.
If adjustment to the headlamps is necessary, see your dealer.

Bulb Replacement

LED Lighting

This vehicle has all LED lamps. For replacement of any LED lighting assembly, contact your dealer.

Electrical System

Electrical System Overload

The vehicle has fuses to protect against an electrical system overload.

When the current electrical load is too heavy, the circuit breaker opens and closes, protecting the circuit until the current load returns to normal or the problem is fixed. This greatly reduces the chance of circuit overload and fire caused by electrical problems.

Fuses protect the wires that provide the power to the devices in your vehicle.

If there is a problem on the road and a fuse needs to be replaced, the same amperage fuse can be borrowed. Choose some feature of the vehicle that is not needed to use and replace it as soon as possible.

To check a fuse, look at the band inside the fuse. If the band is broken or melted, replace the fuse. Be sure to replace a bad fuse with a fuse of the identical size and rating.

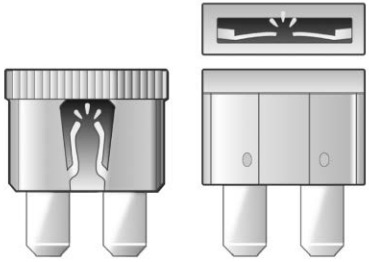

Replacing a Blown Fuse

At the next opportunity, see your dealer to replace the blown fuse.

Headlamp Wiring

An electrical overload may cause the lamps to go on and off, or in some cases to remain off. Have the headlamp wiring checked right away if the lamps go on and off or remain off.

Windshield Wipers

If the wiper motor overheats due to heavy snow or ice, the windshield wipers will stop until the motor cools and will then restart.

Although the circuit is protected from electrical overload, overload due to heavy snow or ice may cause wiper linkage damage. Always clear ice and heavy snow from the windshield before using the windshield wipers.

If the overload is caused by an electrical problem and not snow or ice, be sure to get it fixed.

Fuses and Circuit Breakers

The wiring circuits in the vehicle are protected from short circuits by a combination of fuses and circuit breakers. This greatly reduces the chance of damage caused by electrical problems.

⚠ Danger

Fuses and circuit breakers are marked with their ampere rating. Do not exceed the specified amperage rating when replacing fuses and circuit breakers. Use of an oversized fuse or circuit breaker can result in a vehicle fire. You and others could be seriously injured or killed.

⚠ Warning

Installation or use of fuses that do not meet GM's original fuse specifications is dangerous. The fuses could fail, and result in a fire. You or others could be injured or killed, and the vehicle could be damaged.

See *Accessories and Modifications* ⇨ *232* and *General Information* ⇨ *232*.

To check or replace a blown fuse, see *Electrical System Overload* ⇨ *264*.

Instrument Panel Fuse Block

The instrument panel fuse block is behind the glove box. The glove box can be accessed by unlatching the door damper and squeezing the pivot to release the damper ring. Pull the glove box bin side walls in to release the door stops. Then turn the door until the hinge hooks release from hinge pin.

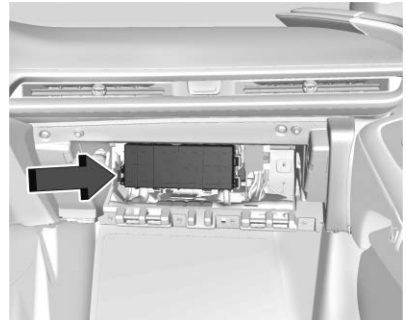

To Access:

1. Open the top cover.
2. Remove the top cover by pushing inward on the latch.
3. Pull the cover upward.

To Install:

1. Insert the tabs on the back of the cover into the slots in the instrument panel.
2. Align the clip with the slots in the instrument panel.
3. Press the cover into place.

See your dealer if additional assistance is needed.

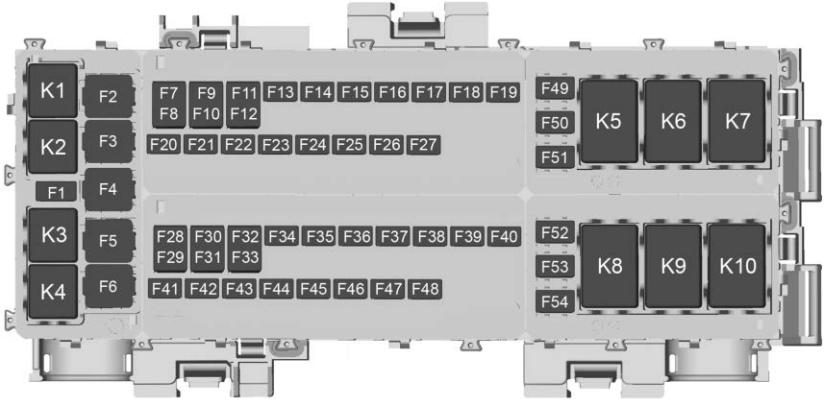

The vehicle may not be equipped with all of the fuses and relays shown.

Fuses	Usage
F1	–
F2	Front Wiper
F3	Cooling Fan 1
F4	–
F5	Cooling Fan 2
F6	Front Blower
F7	Automatic Level Control
F8	Shifter Interface Board Module
F9	Display IP Cluster/HVAC/ Center Stack Module
F10	–
F11	USB
F12	–
F13	–
F14	Glove Box
F15	–
F16	–
F17	Remote Function Actuator
F18	Front Trunk Release
F19	Intelligent Battery Sensor
F20	Exterior Lighting Module 1
F21	Exterior Lighting Module 3
F22	Exterior Lighting Module 4
F23	Body Control Module 2
F24	Exterior Lighting Module 6
F25	Amplifier
F26	Automatic Occupant Sensing/Electric Park Brake
F27	Video Processing Module
F28	Right Headlamp

Fuses	Usage
F29	–
F30	Sensing and Diagnostic Module/Automatic Occupant Sensing
F31	Body Control Module 1
F32	–
F33	Data Link Connection/ Wireless Charging Module
F34	Telematics/Head Up Display
F35	Horn
F36	–
F37	–
F38	Front Wash Pump
F39	Rear Auxiliary Power Outlet
F40	Performance Data Recorder/Center Stack Module
F41	–
F42	Theft Deterrent
F43	Left Headlamp
F44	Exterior Lighting Module 2
F45	Power Steering Column Module
F46	Body Control Module 3
F47	Exterior Lighting Module 5
F48	Exterior Lighting Module 7
F49	Body Control Module 4
F50	Front Auxiliary Power Outlet
F51	–
F52	Steering Wheel Control Switch
F53	Heated Steering Wheel
F54	–

Relays	Usage
K1	–
K2	Glove Box Relay
K3	Horn Relay
K4	Front Wash Relay
K5	Retained Accessory Power/Accessory Relay
K6	Front Trunk Release Relay 1
K7	–
K8	–
K9	Front Trunk Release Relay 2
K10	Wiper Relay

Rear Compartment Fuse Block

The rear compartment fuse block is in the rear of the vehicle in between the seats.

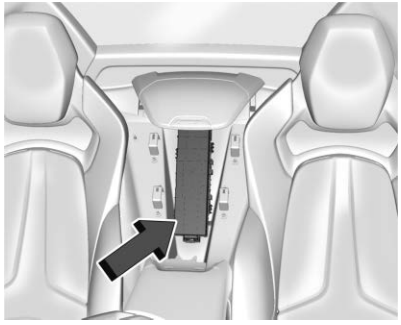

To Access:

1. Open top cover.
2. Remove the top cover by pushing inward on the latch.
3. Pull the cover upward.

To Install:

1. Insert the tabs on the back of the cover into the slots in the rear compartment.
2. Align the clip with the slots in the instrument panel.
3. Press the cover into place.

See your dealer if additional assistance is needed.

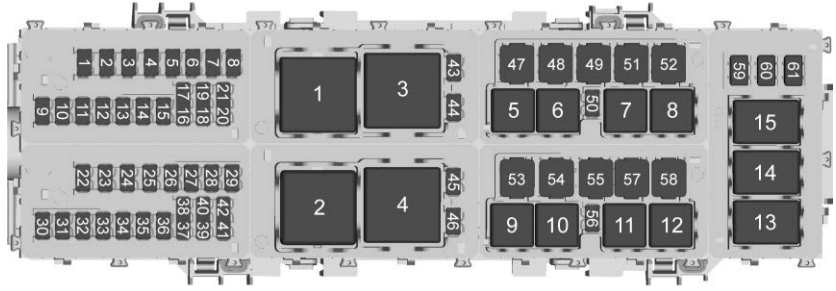

The vehicle may not be equipped with all of the fuses, relays, and features shown.

Fuses	Usage
1	Driver Memory Seat Module/Power Seat
2	Driver Heated Seat
3	Passenger Memory Seat Module/Power Seat
4	Passenger Heated Seat
5	Transmission Control Module
6	–
7	Power Sounder Module/ Pedestrian Friendly Alert Function
8	Side Blind Zone Alert/ Rear Park Assist
9	–

Fuses	Usage
10	Engine Control Module/ Air Conditioning
11	–
12	Lithium Ion Battery Module
13	Active Fuel Management
14	Seat Fan
15	–
16	Exterior Lighting Module
17	Instrument Panel Cluster/Shifter Interface Board/Transmission Control Module/ Electronic Brake Control Module
18	Engine Control Module
19	–
20	Sensing and Diagnostic Module/Inside Rear View Mirror
21	Exhaust Valve Solenoid
22	Fuel Pump/Fuel Tank Zone Module
23	Tonneau Left
24	Tonneau Right
25	Convertible Top Right
26	Convertible Top Left
27	Electronic Suspension Control
28	–
29	CGM
30	O2 Sensor
31	O2 Sensor/Engine Oil/ Canister Purge/Active Fuel Management
32	Ignition Even
33	Ignition Odd
34	Engine Control Module 1
35	Engine Control Module/ Mass Air Flow Sensor/ O2 Sensor/Air Conditioning
36	–
37	Canister Vent
38	Latch Control Module
39	Right Window Switch/ Door Lock
40	Left Window Switch/ Door Lock
41	–
42	Engine Control Module 2
43	–
44	Air Conditioning Clutch
45	–
46	–
47	–
48	–
49	Auxiliary Cooling Fan Right
50	–
51	–
52	–
53	Starter Solenoid

Fuses	Usage
54	Auxiliary Cooling Fan Left
55	Automatic Leveling Control
56	–
57	Rear Window Defogger
58	–
59	Left/Right Window
60	Passenger Power Seat
61	Driver Power Seat

Relays	Usage
1	–
2	Powertrain Relay
3	Run/Crank Relay
4	Rear Defogger Relay
5	Air Conditioning Clutch Relay
6	–
7	–
8	–
9	–
10	–
11	–
12	–
13	–
14	Starter Solenoid Relay
15	–

Wheels and Tires

Tires

Every new GM vehicle has high-quality tires made by a leading tire manufacturer. See the warranty manual for information regarding the tire warranty and where to get service. For additional information refer to the tire manufacturer.

⚠ Warning

- Poorly maintained and improperly used tires are dangerous.

(Continued)

Warning (Continued)

- Overloading the tires can cause overheating as a result of too much flexing. There could be a blowout and a serious crash. See *Vehicle Load Limits* ⇨ *186*.
- Underinflated tires pose the same danger as overloaded tires. The resulting crash could cause serious injury. Check all tires frequently to maintain the recommended pressure. Tire pressure should be checked when the tires are cold.
- Overinflated tires are more likely to be cut, punctured, or broken by a sudden impact — such as when hitting a pothole. Keep tires at the recommended pressure.
- Worn or old tires can cause a crash. If the tread is badly worn, replace them.
- Replace any tires that have been damaged by impacts with potholes, curbs, etc.

(Continued)

Warning (Continued)

- Improperly repaired tires can cause a crash. Only your dealer or an authorized tire service center should repair, replace, dismount, and mount the tires.
- Do not spin the tires in excess of 56 km/h (35 mph) on slippery surfaces such as snow, mud, ice, etc. Excessive spinning may cause the tires to explode.

See *Tire Pressure for High-Speed Operation* ⇨ *279* for inflation pressure adjustment for high-speed driving.

All-Season Tires

This vehicle may come with all-season tires. These tires are designed to provide good overall performance on most road surfaces and weather conditions. Original equipment tires designed to GM's specific tire performance criteria have a TPC specification code molded onto the sidewall. Original equipment all-season tires can be identified by the last two characters of this TPC code, which will be “MS.”

Consider installing winter tires on the vehicle if frequent driving on snow or ice-covered roads is expected. All-season tires provide adequate performance for most winter driving conditions, but they may not offer the same level of traction or performance as winter tires on snow or ice-covered roads. See *Winter Tires* ⇨ *272*.

Winter Tires

This vehicle was not originally equipped with winter tires. Winter tires are designed for increased traction on snow and ice-covered roads. Consider installing winter tires on the vehicle if frequent driving on ice or snow covered roads is expected. See your dealer for details regarding winter tire availability and proper tire selection. Also, see *Buying New Tires* ⇨ *285*.

With winter tires, there may be decreased dry road traction, increased road noise, and shorter tread life. After changing to winter tires, be alert for changes in vehicle handling and braking.

If using winter tires:

- Use tires of the same brand and tread type on all four wheel positions.
- Use only radial ply tires of the same size, load range, and speed rating as the original equipment tires.

Winter tires with the same speed rating as the original equipment tires may not be available for H, V, W, Y, and ZR speed rated tires. If winter tires with a lower speed rating are chosen, never exceed the tire's maximum speed capability.

Run-Flat Tires

This vehicle, when new, may have had run-flat tires. There is no spare tire, no tire changing equipment, and no place to store a tire in the vehicle.

⚠ Warning

While driving with run-flat tires at a reduced inflation pressure, avoid making sudden stops or severe maneuvers as the handling capabilities of the tires will be reduced. Driving too fast could cause loss of control and you or others could be injured. Do not drive over 80 km/h (50 mph) with the tire operating at low pressure. Drive cautiously and check the tire pressure as soon as possible.

Run-flat tires can be driven up to 80 km (50 mi) at speeds less than 80 km/h (50 mph) after a loss of inflation pressure has occurred. There is no need to stop on the side of the road to change the tire. The possible driving range after a pressure loss will vary based on the vehicle load and driving conditions. As soon as possible, contact the nearest authorized GM or run-flat servicing facility for inspection and repair or replacement.

When driving on a deflated run-flat tire, avoid potholes and other road hazards that could damage the tire and/or wheel beyond repair. When a tire has been damaged, or if driven any distance while deflated, check with an authorized run-flat tire service center to determine whether the tire can be repaired or should be replaced. To maintain the run-flat feature, all replacement tires must be run-flat tires.

To locate the nearest GM or run-flat servicing facility, call Customer Assistance.

Low-Profile Tires

If the vehicle has 245/35ZR19, 305/30ZR20, 275/30ZR20, or 345/25ZR21 size tires, they are classified as low-profile tires.

Caution

Low-profile tires are more susceptible to damage from road hazards or curb impact than standard profile tires. Tire and/or wheel assembly damage can occur when coming into contact with road hazards like potholes, or sharp edged objects, or when sliding into a curb. The warranty does not cover this type of damage. Keep tires set to the correct inflation pressure and when possible, avoid contact with curbs, potholes, and other road hazards.

Competition Oriented Tires

This vehicle may come with 275/30ZR20 and 345/25ZR21, Michelin Pilot Sport Cup 2 R ZP, competition oriented tires that are DOT approved for street use. Competition oriented tires use a special tread pattern and compound that provide more grip than normal road tires. The minimum tread depth will be reached earlier than typical tires, resulting in reduced tire life. This special tread pattern and compound will have decreased performance in cold climates, heavy rain, and standing water. It is recommended that winter tires be installed on the vehicle when driving at temperatures below approximately 10 °C (50 °F) or on ice or snow covered roads.

⚠ Warning

Driving on wet roads, in heavy rain, or through standing water with competition oriented tires may cause hydroplaning and loss of control. Use extreme caution and drive slowly on wet roads.

⚠ Warning

Driving with competition oriented tires on snow, ice, or cold road surfaces can cause loss of control or a crash. Competition oriented tires are summer season tires and are not intended to be driven on snow, ice, or road surfaces below 10 °C (50 °F). Do not drive a vehicle with competition oriented tires in these conditions.

Caution

Competition oriented tires have rubber compounds that lose flexibility and may develop surface cracks in the tread area at temperatures below −7 °C (20 °F). Always store competition oriented tires indoors and at temperatures above −7 °C (20 °F) when not in use. If the tires have been subjected to −7 °C (20 °F) or less, let them warm up in a heated space to at least 10 °C (50 °F) for 24 hours or more before being installed or driving a vehicle on which they are installed. Do not apply

(Continued)

Caution (Continued)

heat or blow heated air directly on the tires. Always inspect tires before use. See *Tire Inspection* ⇨ *283*.

Summer Tires

High Performance Summer Tires

This vehicle may come with 245/35ZR19 and 305/30ZR20 Michelin Pilot Sport 4 S ZP or 275/30ZR20 and 345/25ZR21 Michelin Pilot Sport 4 S ZP high performance summer tires. These tires have a special tread and compound that are optimized for maximum dry and wet road performance. This special tread and compound will have decreased performance in cold climates, and on ice and snow. It is recommended that winter tires be installed on the vehicle if frequent driving at temperatures below approximately 5 °C (40 °F) or on ice or snow covered roads is expected. See *Winter Tires* ⇨ *272*.

Caution

High performance summer tires have rubber compounds that lose flexibility and may develop surface cracks in the tread area at temperatures below −7 °C (20 °F). Always store high performance summer tires indoors and at temperatures above −7 °C (20 °F) when not in use. If the tires have been subjected to −7 °C (20 °F) or less, let them warm up in a heated space to at least 5 °C (40 °F) for 24 hours or more before being installed or driving a vehicle on which they are installed. Do not apply heat or blow heated air directly on the tires. Always inspect tires before use. See *Tire Inspection* ⇨ *283*.

Tire Sidewall Labeling

Useful information about a tire is molded into its sidewall. The example shows a typical passenger tire sidewall.

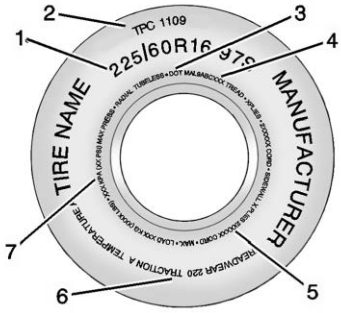

Passenger Tire Example

(1) Tire Size : The tire size is a combination of letters and numbers used to define a particular tire's width, height, aspect ratio, construction type, and service description. See the "Tire Size" illustration later in this section.

(2) TPC Spec (Tire Performance Criteria Specification) : Original equipment tires designed to GM's specific tire performance criteria have a TPC specification code molded onto the sidewall. GM's TPC specifications meet or exceed all federal safety guidelines.

(3) DOT (Department of Transportation) : The Department of Transportation (DOT) code indicates that the tire is in compliance with the U.S. Department of Transportation Motor Vehicle Safety Standards.

DOT Tire Date of Manufacture : The last four digits of the TIN indicate the tire manufactured date. The first two digits represent the week and the last two digits, the year. For example, the third week of the year 2020 would have a 4-digit DOT date of 0320. Week 01 is the first full week (Sunday through Saturday) of each year.

(4) Tire Identification Number (TIN) : The letters and numbers following the DOT code are the Tire Identification Number (TIN). The TIN shows the manufacturer and plant code, tire size, and date the tire was manufactured. The TIN is molded onto both sides of the tire, although only one side may have the date of manufacture.

(5) Tire Ply Material : The type of cord and number of plies in the sidewall and under the tread.

(6) Uniform Tire Quality Grading (UTQG) : Tire manufacturers are required to grade tires based on three performance factors: treadwear, traction, and temperature resistance. For more information, see *Uniform Tire Quality Grading* ⇨ *287*.

(7) Maximum Cold Inflation Load Limit : Maximum load that can be carried and the maximum pressure needed to support that load.

Tire Designations

Tire Size

The example shows a typical passenger vehicle tire size.

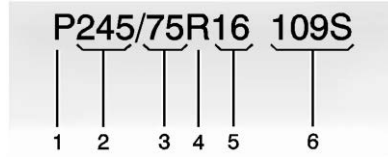

Passenger (P-Metric) Tire

(1) Passenger (P-Metric) Tire : The United States version of a metric tire sizing system. The letter "P" as the first character in the tire size means a passenger vehicle tire engineered to standards set by the U.S. Tire and Rim Association.

(2) Tire Width : The 3-digit number indicates the tire section width in millimeters from sidewall to sidewall.

(3) Aspect Ratio : A 2-digit number that indicates the tire height-to-width measurements. For example, if the tire size aspect ratio is 75, as shown in item (3) of the illustration, it would mean that the tire's sidewall is 75 percent as high as it is wide.

(4) Construction Code : A letter code is used to indicate the type of ply construction in the tire. The letter "R" means radial ply construction; the letter "D" means diagonal or bias ply construction.

(5) Rim Diameter : Diameter of the wheel in inches.

(6) Service Description : These characters represent the load index and speed rating of the tire. The load index represents the load carrying capacity a tire is certified to carry. The speed rating is the maximum speed a tire is certified to carry a load.

Tire Terminology and Definitions

Air Pressure : The amount of air inside the tire pressing outward on each square inch of the tire. Air pressure is expressed in kPa (kilopascal) or psi (pounds per square inch).

Aspect Ratio : The relationship of a tire's height to its width.

Belt : A rubber coated layer of cords that is located between the plies and the tread. Cords may be made from steel or other reinforcing materials.

Bead : The tire bead contains steel wires wrapped by steel cords that hold the tire onto the rim.

Bias Ply Tire : A pneumatic tire in which the plies are laid at alternate angles less than 90 degrees to the centerline of the tread.

Cold Tire Pressure : The amount of air pressure in a tire, measured in kPa (kilopascal) or psi (pounds per square inch) before a tire has built up heat from driving. See *Tire Pressure* ⇨ *278*.

DOT Markings : A code molded into the sidewall of a tire signifying that the tire is in compliance with the U.S. Department of Transportation (DOT) Motor Vehicle Safety Standards. The DOT code includes the Tire Identification Number (TIN), an alphanumeric designator which can also identify the tire manufacturer, production plant, brand, and date of production.

GVWR : Gross Vehicle Weight Rating. See *Vehicle Load Limits* ⇨ *186*.

GAWR FRT : Gross Axle Weight Rating for the front axle. See *Vehicle Load Limits* ⇨ *186*.

GAWR RR : Gross Axle Weight Rating for the rear axle. See *Vehicle Load Limits* ⇨ *186*.

Intended Outboard Sidewall : The side of an asymmetrical tire, that must always face outward when mounted on a vehicle.

Kilopascal (kPa) : The metric unit for air pressure.

Light Truck (LT-Metric) Tire : A tire used on light duty trucks and some multipurpose passenger vehicles.

Load Index : An assigned number ranging from 1 to 279 that corresponds to the load carrying capacity of a tire.

Maximum Inflation Pressure : The maximum air pressure to which a cold tire can be inflated. The maximum air pressure is molded onto the sidewall.

Maximum Load Rating : The load rating for a tire at the maximum permissible inflation pressure for that tire.

Occupant Distribution : Designated seating positions.

Outward Facing Sidewall : The side of an asymmetrical tire that has a particular side that faces outward when mounted on a vehicle. The side of the tire that contains a whitewall, bears white lettering, or bears manufacturer, brand, and/or model name molding that is higher or deeper than the same moldings on the other sidewall of the tire.

Passenger (P-Metric) Tire : A tire used on passenger cars and some light duty trucks and multipurpose vehicles.

Recommended Inflation Pressure : Vehicle manufacturer's recommended tire inflation pressure as shown on the tire placard. See *Tire Pressure* ⇨ *278* and *Vehicle Load Limits* ⇨ *186*.

Radial Ply Tire : A pneumatic tire in which the ply cords that extend to the beads are laid at 90 degrees to the centerline of the tread.

Rim : A metal support for a tire and upon which the tire beads are seated.

Sidewall : The portion of a tire between the tread and the bead.

Speed Rating : An alphanumeric code assigned to a tire indicating the maximum speed at which a tire can operate.

Traction : The friction between the tire and the road surface. The amount of grip provided.

Tread : The portion of a tire that comes into contact with the road.

Treadwear Indicators : Narrow bands, sometimes called wear bars, that show across the tread of a tire when only 1.6 mm (1/16 in) of tread remains. See *When It Is Time for New Tires* ⇨ *285*.

UTQGS (Uniform Tire Quality Grading Standards) : A tire information system that provides consumers with ratings for a tire's traction, temperature, and treadwear. Ratings are determined by tire manufacturers using government testing procedures. The ratings are molded into the sidewall of the tire. See *Uniform Tire Quality Grading* ⇨ *287*.

Vehicle Capacity Weight : The number of designated seating positions multiplied by 68 kg (150 lbs) plus the rated cargo load. See *Vehicle Load Limits* ⇨ *186*.

Vehicle Maximum Load on the Tire : Load on an individual tire due to curb weight, accessory weight, occupant weight, and cargo weight.

Vehicle Placard : A label permanently attached to a vehicle showing the vehicle's capacity weight and the original equipment tire size and recommended inflation pressure. See "Tire and Loading Information Label" under *Vehicle Load Limits* ⇨ *186*.

Tire Pressure

Tires need the correct amount of air pressure to operate effectively.

⚠ Warning

Neither tire underinflation nor overinflation is good. Underinflated tires, or tires that do not have enough air, can result in:

- Tire overloading and overheating, which could lead to a blowout
- Premature or irregular wear
- Poor handling
- Reduced fuel economy for internal combustion engine vehicles
- Reduced range for electric vehicles

Overinflated tires, or tires that have too much air, can result in:

- Unusual wear
- Poor handling
- Rough ride

(Continued)

Warning (Continued)

- Needless damage from road hazards

The Tire and Loading Information label on the vehicle indicates the original equipment tires and the correct cold tire inflation pressures. The recommended pressure is the minimum air pressure needed to support the vehicle's maximum load carrying capacity. See *Vehicle Load Limits* ⇨ *186*.

How the vehicle is loaded affects vehicle handling and ride comfort. Never load the vehicle with more weight than it was designed to carry.

When to Check

Check the pressure of the tires once a month or more.

How to Check

Use a good quality pocket-type gauge to check tire pressure. Proper tire inflation cannot be determined by looking at the tire. Check the tire inflation pressure when the tires are cold, meaning the vehicle has not been driven for at least three hours or no more than 1.6 km (1 mi).

Remove the valve cap from the tire valve stem. Press the tire gauge firmly onto the valve to get a pressure measurement. If the cold tire inflation pressure matches the recommended pressure on the Tire and Loading Information label, no further adjustment is necessary. If the inflation pressure is low, add air until the recommended pressure is reached. If the inflation pressure is high, press on the metal stem in the center of the tire valve to release air.

Recheck the tire pressure with the tire gauge.

Put the valve caps back on the valve stems to keep out dirt and moisture. Use only valve caps designed for the vehicle by GM. TPMS sensors could be damaged and would not be covered by the vehicle warranty.

Tire Pressure for High-Speed Operation

⚠ Warning

Driving at high speeds, 225 km/h (140 mph) or higher, puts additional strain on tires. Sustained high-speed driving causes excessive heat buildup and can cause sudden tire failure. This could cause a crash, and you or others could be killed. Some high-speed rated tires require inflation pressure adjustment for high-speed operation. When speed limits and road conditions allow the vehicle to be driven at high speeds, make sure the tires are rated for high-speed operation, are in excellent condition, and are set to the correct cold tire inflation pressure for the vehicle load.

Vehicles with tire sizes listed in the High Speed Operation Inflation Pressures table require inflation pressure adjustment when driving the vehicle at speeds of 160 km/h (100 mph) or higher. Set the cold tire inflation pressure to the corresponding value in the table for the tire size on the vehicle.

High Speed Operation Inflation Pressures	
Tire Size	Cold Inflation Pressure kPa (psi)
245/35ZR19	260 kPa (38 psi)
305/30ZR20	260 kPa (38 psi)
275/30ZR20	260 kPa (38 psi)
345/25ZR21	290 kPa (42 psi)

See *Track Events and Competitive Driving* ⇨ *172* for track use.

Return the tires to the recommended cold tire inflation pressure when high-speed driving has ended. See *Vehicle Load Limits* ⇨ *186* and *Tire Pressure* ⇨ *278*.

Tire Pressure Monitor System

The Tire Pressure Monitor System (TPMS) uses radio and sensor technology to check tire pressure levels. The TPMS sensors monitor the air pressure in your tires and transmit tire pressure readings to a receiver located in the vehicle.

Each tire, including the spare (if provided), should be checked monthly when cold and inflated to the inflation pressure recommended by the vehicle manufacturer on the vehicle placard or tire inflation pressure label. (If your vehicle has tires of a different size than the size indicated on the vehicle placard or tire inflation pressure label, you should determine the proper tire inflation pressure for those tires.)

As an added safety feature, your vehicle has been equipped with a tire pressure monitoring system (TPMS) that illuminates a low tire pressure telltale when one or more of your tires is significantly under-inflated.

Accordingly, when the low tire pressure telltale illuminates, you should stop and check your tires as soon as possible, and inflate them to the proper pressure. Driving on a significantly under-inflated tire causes the tire to overheat and can lead to tire failure. Under-inflation also reduces energy efficiency and tire tread life, and may affect the vehicle's handling and stopping ability.

Please note that the TPMS is not a substitute for proper tire maintenance, and it is the driver's responsibility to maintain correct tire pressure, even if under-inflation has not reached the level to trigger illumination of the TPMS low tire pressure telltale.

Your vehicle has also been equipped with a TPMS malfunction indicator to indicate when the system is not operating properly. The TPMS malfunction indicator is combined with the low tire pressure telltale. When the system detects a malfunction, the telltale will flash for approximately one minute and then remain continuously illuminated. This

sequence will continue upon subsequent vehicle start-ups as long as the malfunction exists.

When the malfunction indicator is illuminated, the system may not be able to detect or signal low tire pressure as intended. TPMS malfunctions may occur for a variety of reasons, including the installation of replacement or alternate tires or wheels on the vehicle that prevent the TPMS from functioning properly. Always check the TPMS malfunction telltale after replacing one or more tires or wheels on your vehicle to ensure that the replacement or alternate tires and wheels allow the TPMS to continue to function properly.

See *Tire Pressure Monitor Operation* ⇨ *281*.

See *Radio Frequency Statement* ⇨ *327*.

Tire Pressure Monitor Operation

This vehicle may have a Tire Pressure Monitor System (TPMS). The TPMS is designed to warn the driver when a low tire pressure condition exists. TPMS sensors are mounted onto each tire and wheel assembly, excluding the spare tire and wheel assembly. The TPMS sensors monitor the air pressure in the tires and transmit the tire pressure readings to a receiver located in the vehicle.

When a low tire pressure condition is detected, the TPMS illuminates the low tire pressure warning light located on the instrument cluster. If the warning light comes on, stop as soon as possible and inflate the tires to the recommended pressure shown on the Tire and Loading Information label. See *Vehicle Load Limits* ⇨ *186*.

A message to check the pressure in a specific tire displays in the Driver Information Center (DIC). The low tire pressure warning light and the DIC warning message come on each time the vehicle is turned on until the tires are inflated to the correct inflation pressure. If the vehicle has DIC buttons, tire pressure levels can be viewed. For additional information and details about the DIC operation and displays, see *Driver Information Center (DIC)* ⇨ *92*.

The low tire pressure warning light may come on in cool weather when the vehicle is first started, and then turn off as the vehicle is driven. This could be an early indicator that the air pressure is getting low and needs to be inflated to the proper pressure.

A Tire and Loading Information label shows the size of the original equipment tires and the correct inflation pressure for the tires when they are cold. See *Vehicle Load Limits* ⇨ *186*, for an example of the Tire and Loading Information label and its location. Also see *Tire Pressure* ⇨ *278*.

The TPMS can warn about a low tire pressure condition but it does not replace normal tire maintenance. See *Tire Inspection* ⇨ *283*, *Tire Rotation* ⇨ *283*, and *Tires* ⇨ *271*.

Caution

Tire sealant materials are not all the same. A non-approved tire sealant could damage the TPMS sensors. TPMS sensor damage caused by using an incorrect tire sealant is not covered by the vehicle warranty. Always use only the GM approved tire sealant available through your dealer or included in the vehicle.

TPMS Malfunction Light and Message

The TPMS will not function properly if one or more of the TPMS sensors are missing or inoperable. When the system detects a malfunction, the low tire pressure warning light flashes for about one minute and then stays on for the remainder of the time the vehicle is on. A DIC warning message also displays. The malfunction light and DIC warning message will come on each time the vehicle is turned on until the problem is corrected. Some of the conditions that can cause these to come on are:

- One of the road tires has been replaced with the spare tire. The spare tire does not have a TPMS sensor. The malfunction light and the DIC message should go off after the road tire is replaced and the sensor matching process is performed successfully. See "TPMS Sensor Matching Process" later in this section.
- The TPMS sensor matching process was not done or not completed successfully after rotating the tires. The malfunction light and the DIC message should go off after successfully completing the sensor matching process. See "TPMS Sensor Matching Process" later in this section.
- One or more TPMS sensors are missing or damaged. The malfunction light and the DIC message should go off when the TPMS sensors are installed and the sensor matching process is performed successfully. See your dealer for service.
- Replacement tires or wheels do not match the original equipment tires or wheels. Tires and wheels other than those recommended could prevent the TPMS from functioning properly. See *Buying New Tires* ⇨ *285*.
- Operating electronic devices or being near facilities using radio wave frequencies similar to the TPMS could cause the TPMS sensors to malfunction.

If the TPMS is not functioning properly, it cannot detect or signal a low tire pressure condition. See your dealer for service if the TPMS malfunction light and DIC message come on and stay on.

Tire Fill Alert (If Equipped)

This feature provides visual and audible alerts outside the vehicle to help when inflating an underinflated tire to the recommended cold tire pressure.

When the low tire pressure warning light comes on:

1. Park the vehicle in a safe, level place.
2. Set the parking brake firmly.
3. Place the vehicle in P (Park).
4. Add air to the tire that is underinflated. The turn signal lamp will flash.

   When the recommended pressure is reached, the horn sounds once and the turn signal lamp will stop flashing and briefly turn solid.

Repeat these steps for all underinflated tires that have illuminated the low tire pressure warning light.

⚠ Warning

Overinflating a tire could cause the tire to rupture and you or others could be injured. Do not exceed the maximum pressure listed on the tire sidewall. See *Tire Sidewall Labeling* ⇨ *274* and *Vehicle Load Limits* ⇨ *186*.

If the tire is overinflated by more than 35 kPa (5 psi), the horn will sound multiple times and the turn signal lamp will continue to flash for several seconds after filling stops. To release and correct the pressure,

while the turn signal lamp is still flashing, briefly press the center of the valve stem. When the recommended pressure is reached, the horn sounds once.

If the turn signal lamp does not flash within 15 seconds after starting to inflate the tire, the tire fill alert has not been activated or is not working.

If the hazard warning flashers are on, the tire fill alert visual feedback will not work properly.

The TPMS will not activate the tire fill alert properly under the following conditions:

- There is interference from an external device or transmitter.
- The air pressure from the inflation device is not sufficient to inflate the tire.
- There is a malfunction in the TPMS.
- There is a malfunction in the horn or turn signal lamps.
- The identification code of the TPMS sensor is not registered to the system.
- The battery of the TPMS sensor is low.

If the tire fill alert does not operate due to TPMS interference, move the vehicle about 1 m (3 ft) back or forward and try again. If the tire fill alert feature is not working, use a tire pressure gauge.

TPMS Sensor Matching Process — Auto Learn Function

Each TPMS sensor has a unique identification code. The identification code needs to be matched to a new tire/wheel position after rotating the tires or replacing one or more of the TPMS sensors. When a tire is installed, the vehicle must be stationary for about 20 minutes before the system recalculates. The following relearn process takes up to 10 minutes, driving at a minimum speed of 20 km/h (12 mph). A dash (-) or pressure value will display in the DIC. See *Driver Information Center (DIC)* ⇨ *92*. A warning message displays in the DIC if a problem occurs during the relearn process.

Tire Inspection

We recommend that the tires, including the spare tire, if the vehicle has one, be inspected for signs of wear or damage at least once a month.

Replace the tire if:

- The indicators at three or more places around the tire can be seen.
- There is cord or fabric showing through the tire's rubber.
- The tread or sidewall is cracked, cut, or snagged deep enough to show cord or fabric.
- The tire has a bump, bulge, or split.
- The tire has a puncture, cut, or other damage that cannot be repaired well because of the size or location of the damage.

Tire Rotation

Tires should be rotated according to the interval listed in the maintenance schedule. See *Maintenance Schedule* ⇨ *306*.

Tires are rotated to achieve uniform wear for all tires. The first rotation is the most important.

Anytime unusual wear is noticed, rotate the tires as soon as possible, check for proper tire inflation pressure, and check

for damaged tires or wheels. If the unusual wear continues after the rotation, check the wheel alignment. See *When It Is Time for New Tires* ⇨ *285* and *Wheel Replacement* ⇨ *288*.

Different tire sizes should not be rotated front to rear.

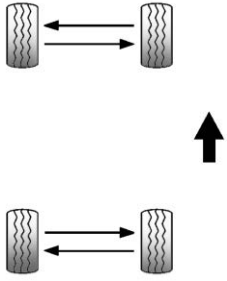

Use this rotation pattern if the vehicle has different size tires on the front and rear.

Caution

Wheels will become scratched if not handled properly. When laying a tire and wheel assembly flat on the ground, place it face up with a towel underneath it. Move the assembly by rolling it on the tires. Do not drag it.

Adjust the front and rear tires to the recommended inflation pressure on the Tire and Loading Information label after the tires have been rotated. See *Tire Pressure* ⇨ *278* and *Vehicle Load Limits* ⇨ *186*.

Reset the Tire Pressure Monitor System. See *Tire Pressure Monitor Operation* ⇨ *281*.

Check that all wheel nuts are properly tightened. See "Wheel Nut Torque" under *Capacities and Specifications* ⇨ *315*.

⚠ Warning

Rust or dirt on a wheel, or on the parts to which it is fastened, can cause wheel nuts to become loose over time. The wheel could come off and cause a crash. When changing a wheel, remove any rust or dirt from places where the wheel attaches to the vehicle. In an emergency, a cloth or paper towel can be used; however, use a scraper or wire brush later to remove all rust or dirt.

Lightly coat the inner diameter of the wheel hub opening with wheel bearing grease after a wheel change or tire rotation to prevent corrosion or rust buildup.

⚠ Warning

Do not apply grease to the wheel mounting surface, wheel conical seats, or the wheel nuts or bolts. Grease applied to these areas could cause a wheel to become loose or come off, resulting in a crash.

When It Is Time for New Tires

Factors, such as maintenance, temperatures, driving speeds, vehicle loading, and road conditions affect the wear rate of the tires.

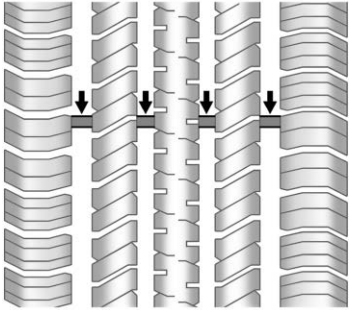

Treadwear indicators are one way to tell when it is time for new tires. Treadwear indicators appear when the tires have only 1.6 mm (1/16 in) or less of tread remaining. See *Tire Inspection* ⇨ *283* and *Tire Rotation* ⇨ *283*.

The rubber in tires ages over time. This also applies to the spare tire, if the vehicle has one, even if it is never used. Multiple factors including temperatures, loading conditions, and inflation pressure maintenance affect how fast aging takes place. GM recommends that tires, including the spare if equipped, be replaced after six years, regardless of tread wear. To identify the age of a tire, use the tire manufacture date, which is the last four digits of the DOT Tire Identification Number (TIN) molded into one side of the tire sidewall. The last four digits of the TIN indicate the tire manufactured date. The first two digits represent the week and the last two digits, the year. For example, the third week of the year 2020 would have a 4-digit DOT date of 0320. Week 01 is the first full week (Sunday through Saturday) of each year.

Vehicle Storage

Tires age when stored normally mounted on a parked vehicle. Park a vehicle that will be stored for at least a month in a cool, dry, clean area away from direct sunlight to slow aging. This area should be free of grease, gasoline, or other substances that can deteriorate rubber.

Parking for an extended period can cause flat spots on the tires that may result in vibrations while driving. When storing a vehicle for at least a month, remove the tires or raise the vehicle to reduce the weight from the tires.

Buying New Tires

GM has developed and matched specific tires for the vehicle. The original equipment tires installed were designed to meet General Motors Tire Performance Criteria Specification (TPC Spec) system rating. When replacement tires are needed, GM strongly recommends buying tires with the same TPC Spec rating.

GM's exclusive TPC Spec system considers over a dozen critical specifications that impact the overall performance of the vehicle, including brake system performance, ride and handling, traction control, and tire pressure monitoring performance. GM's TPC Spec number is molded onto the tire's sidewall near the tire size. If the tires have an all-season tread design, the TPC Spec number will be followed by MS for mud and snow. See *Tire Sidewall Labeling* ⇨ *274* for additional information.

GM recommends replacing worn tires in complete sets of four. Uniform tread depth on all tires will help to maintain the performance of the vehicle. Braking and handling performance may be adversely affected if all the tires are not replaced at the same time. If proper rotation and maintenance have been done, all four tires should wear out at about the same time. However, if it is necessary to replace only one axle set of worn tires, place the new tires on the rear axle. See *Tire Rotation* ⇨ *283*.

⚠ Warning

Tires could explode during improper service. Attempting to mount or dismount a tire could cause injury or death. Only your dealer or authorized tire service center should mount or dismount the tires.

⚠ Warning

Mixing tires of different sizes (other than those originally installed on the vehicle), brands, tread patterns, or types may cause loss of vehicle control, resulting in a crash or other vehicle damage. Use the correct size, brand, and type of tire on all wheels.

⚠ Warning

Using bias-ply tires on the vehicle may cause the wheel rim flanges to develop cracks after many miles of driving. A tire and/or wheel could fail suddenly and cause a crash. Use only radial-ply tires with the wheels on the vehicle.

Winter tires with the same speed rating as the original equipment tires may not be available for H, V, W, Y and ZR speed rated tires. Never exceed the winter tires' maximum speed capability when using winter tires with a lower speed rating.

If the vehicle tires must be replaced with a tire that does not have a TPC Spec number, make sure they are the same size, load range, speed rating, and construction (radial) as the original tires.

The Tire and Loading Information label indicates the original equipment tires on the vehicle. See *Vehicle Load Limits* ⇨ *186*.

Different Size Tires and Wheels

If wheels or tires are installed that are a different size than the original equipment wheels and tires, vehicle performance, including its braking, ride and handling characteristics, stability, and resistance to rollover may be affected. If the vehicle has electronic systems such as antilock brakes, rollover airbags, traction control, or electronic stability control, the performance of these systems can also be affected.

⚠ Warning

If different sized wheels are used, there may not be an acceptable level of performance and safety if tires not recommended for those wheels are selected. This increases the chance of a crash and serious injury. Only use GM specific wheel and tire systems developed for the vehicle, and have them properly installed by a GM certified technician.

See *Buying New Tires* ⇨ *285* and *Accessories and Modifications* ⇨ *232*.

Uniform Tire Quality Grading

The following information relates to the system developed by the United States National Highway Traffic Safety Administration (NHTSA), which grades tires by treadwear, traction, and temperature performance. This applies only to vehicles sold in the United States. The grades are molded on the sidewalls of most passenger car tires. The Uniform Tire Quality Grading (UTQG) system does not apply to deep tread, winter tires, compact spare tires, tires with nominal rim diameters of 10 to 12 inches (25 to 30 cm), or to some limited-production tires.

While the tires available on General Motors passenger cars and light trucks may vary with respect to these grades, they must also conform to federal safety requirements and additional General Motors Tire Performance Criteria (TPC) standards.

Quality grades can be found where applicable on the tire sidewall between tread shoulder and maximum section width. For example:

Treadwear 200 Traction AA Temperature A

All Passenger Car Tires Must Conform to Federal Safety Requirements In Addition To These Grades.

Treadwear

The treadwear grade is a comparative rating based on the wear rate of the tire when tested under controlled conditions on a specified government test course. For example, a tire graded 150 would wear one and one-half (1½) times as well on the government course as a tire graded 100. The relative performance of tires depends upon the actual conditions of their use, however, and may depart significantly from the norm due to variations in driving habits, service practices and differences in road characteristics and climate.

Traction

The traction grades, from highest to lowest, are AA, A, B, and C. Those grades represent the tire's ability to stop on wet pavement as measured under controlled conditions on specified government test surfaces of asphalt and concrete. A tire marked C may have poor traction performance. Warning: The traction grade assigned to this tire is based on straight-ahead braking traction tests, and does not include acceleration, cornering, hydroplaning, or peak traction characteristics.

Temperature

The temperature grades are A (the highest), B, and C, representing the tire's resistance to the generation of heat and its ability to dissipate heat when tested under controlled conditions on a specified indoor laboratory test wheel. Sustained high temperature can cause the material of the tire to degenerate and reduce tire life, and excessive temperature can lead to sudden tire failure. The grade C corresponds to a level of performance which all passenger car tires must meet under the Federal Motor Safety Standard No. 109. Grades B and A represent higher levels of performance on the laboratory test wheel than the minimum required by law. Warning: The temperature grade for this tire is established for a tire that is properly inflated and not overloaded. Excessive speed, underinflation, or excessive loading, either separately or in combination, can cause heat buildup and possible tire failure.

Wheel Alignment and Tire Balance

The tires and wheels were aligned and balanced at the factory to provide the longest tire life and best overall performance. Adjustments to wheel alignment and tire balancing are not necessary on a regular basis. Consider an alignment check if there is unusual tire wear or the vehicle is significantly pulling to one side or the other. Some slight pull to the left or right, depending on the crown of the road and/or other road surface variations such as troughs or ruts, is normal. If the vehicle is vibrating when driving on a smooth road, the tires and wheels may need to be rebalanced. See your dealer for proper diagnosis.

Road Imperfections/Crown Effects

The vehicle's precise steering and handling make it very responsive to road surface feedback. A slight pull may be felt in the steering depending on the crown of the road and/or other road surface variations such as troughs or ruts. This is normal and the vehicle does not require service.

Tire Chatter/Hop

When driving at slow speeds and in very tight turns, the vehicle may have tire chatter/hop. This is normal and the vehicle does not require service.

Wheel Replacement

Replace any wheel that is bent, cracked, or badly rusted or corroded. If wheel nuts keep coming loose, the wheel, wheel bolts, and wheel nuts should be replaced. If the wheel leaks air, replace it. Some aluminum wheels can be repaired. See your dealer if any of these conditions exist.

Your dealer will know the kind of wheel that is needed.

Each new wheel should have the same load-carrying capacity, diameter, width, offset, and be mounted the same way as the one it replaces.

Replace wheels, wheel bolts, wheel nuts, or Tire Pressure Monitor System (TPMS) sensors with new GM original equipment parts.

⚠ Warning

Using the wrong wheel studs can cause wheel nuts to not engage the stud threads and/or wheel. The wheel could come off and cause personal injury and/or death. Carbon fiber wheels require a longer stud than aluminum wheels due to a thicker hub. When changing the wheel type between aluminum and carbon fiber, the studs must match the wheel type. Incorrect studs will not have the correct thread engagement. Use the correct wheel studs for your wheel assembly.

⚠ Warning

Installing wheel nuts on carbon fiber wheels when temperatures are below freezing can result in a damaged assembly. Once temperatures rise, the wheel nut removal torque can be very high making it difficult to remove wheels nuts. This can result in damaged wheel nuts and/or wheel nut inserts. Use of damaged parts could cause the wheel to

(Continued)

Warning (Continued)

come off and cause personal injury, and/or death. Do not install wheel nuts when temperatures are below freezing.

⚠ Warning

Using the wrong replacement wheels, wheel bolts, or wheel nuts can be dangerous. It could affect the braking and handling of the vehicle. Tires can lose air and cause loss of control, resulting in a crash. Always use the correct wheel, wheel bolts, and wheel nuts for replacement.

⚠ Warning

Replacing a wheel with a used one is dangerous. How it has been used or how far it has been driven may be unknown. It could fail suddenly and cause a crash. When replacing wheels, use a new GM original equipment wheel.

Caution

The wrong wheel can also cause problems with bearing life, brake cooling, speedometer or odometer calibration, headlamp aim, bumper height, vehicle ground clearance, and tire or tire chain clearance to the body and chassis.

Tire Chains

⚠ Warning

Do not use tire chains. There is not enough clearance. Tire chains used on a vehicle without the proper amount of clearance can cause damage to the brakes, suspension, or other vehicle parts. The area damaged by the tire chains could cause loss of control and a crash.

Use another type of traction device only if its manufacturer recommends it for the vehicle's tire size combination and road conditions. Follow that manufacturer's instructions. To avoid vehicle damage, drive slowly and readjust or remove the traction device if it contacts the vehicle.

(Continued)

Warning (Continued)

Do not spin the wheels. If traction devices are used, install them on the tires of the drive axle only.

If a Tire Goes Flat

It is unusual for a tire to blow out while driving, especially if the tires are maintained properly. See *Tires* ⇨ *271*. If air goes out of a tire, it is much more likely to leak out slowly. But if there ever is a blowout, here are a few tips about what to expect and what to do:

If a front tire fails, the flat tire creates a drag that pulls the vehicle toward that side. Take your foot off the accelerator pedal and grip the steering wheel firmly. Steer to maintain lane position, and then gently brake to a stop, well off the road, if possible.

A rear blowout, particularly on a curve, acts much like a skid and may require the same correction as used in a skid. Stop pressing the accelerator pedal and steer to straighten the vehicle. It may be very bumpy and noisy. Gently brake to a stop, well off the road, if possible.

The vehicle has no spare tire, no tire changing equipment, and no place to store a tire.

If the vehicle has run-flat tires, there is no need to stop on the side of the road to change a flat tire. See *Run-Flat Tires* ⇨ *272*.

⚠ Warning

Driving on a flat tire will cause permanent damage to the tire. Re-inflating a tire after it has been driven on while severely underinflated or flat may cause a blowout and a serious crash. Never attempt to re-inflate a tire that has been driven on while severely underinflated or flat. Have your dealer or an authorized tire service center repair or replace the flat tire as soon as possible.

⚠ Warning

Special tools and procedures are required to service a run-flat tire. If these special tools and procedures are not used, injury or vehicle damage may occur. Always be sure the proper tools and procedures, as described in the service manual, are used.

Jump Starting

Jump Starting - North America

For more information about the vehicle battery, see *Battery - North America* ⇨ *261*.

If the battery has run down, use another vehicle and some jumper cables to start the vehicle. Be sure to use the following steps to do it safely.

⚠ Warning

WARNING: Battery posts, terminals and related accessories can expose you to chemicals including lead and lead compounds, which are known to the State of California to cause cancer and birth defects or other reproductive harm. Wash hands after handling. For more information go to www.P65Warnings.ca.gov.

See the warning on the back cover.

⚠ Warning

Batteries can hurt you. They can be dangerous because:

- They contain acid that can burn you.
- They contain gas that can explode or ignite.
- They contain enough electricity to burn you.

Use eye protection when handling the battery. If you do not follow these steps exactly, some or all of these things can hurt you.

Caution

Ignoring these steps could result in costly damage to the vehicle that would not be covered by the vehicle warranty. Trying to start the vehicle by pushing or pulling it will not work, and it could damage the vehicle.

The battery is under a battery cover and side extensions/shields in the underhood compartment.

To access the battery under the hood, the right hand and left hand sight shields need to be removed to be able to remove the second cover assembly to access the battery. The positive battery terminal is on the driver side and the negative terminal is on the passenger side.

Before you connect the cables, here are some basic things you should know. Positive (+) will go to the positive (+) terminal. Negative (–) will go the negative (–) terminal.

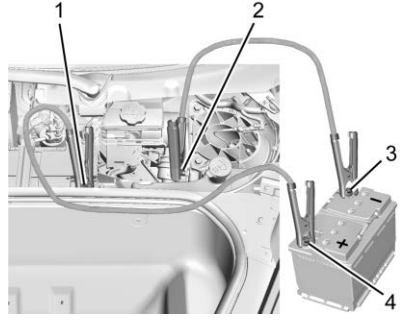

1. Discharged Battery Positive (+) Terminal
2. Discharged Battery Negative (–) Terminal
3. Good Battery Negative (–) Terminal
4. Good Battery Positive (+) Terminal

1. Check the other vehicle. It must have a 12-volt battery with a negative ground system.

Caution

If the other vehicle does not have a 12-volt system with a negative ground, both vehicles can be damaged. Only use a vehicle that has a 12-volt system with a negative ground for jump starting.

2. Get the vehicles close enough so the jumper cables can reach, but be sure the vehicles are not touching each other. If they are, it could cause a ground connection you do not want. You would not be able to start the vehicle, and the bad grounding could damage the electrical systems.

   To avoid the possibility of the vehicles rolling, set the parking brake firmly on both vehicles involved in the jump start procedure. Put an automatic transmission in P (Park) or a manual transmission in Neutral before setting the parking brakes.

Caution

If any accessories are left on or plugged in during the jump starting procedure, they could be damaged. The repairs would not be covered by the vehicle warranty. Whenever possible, turn off or unplug all accessories on either vehicle when jump starting.

3. Turn off the ignition on both vehicles. Unplug unnecessary accessories plugged into the accessory power outlet. Turn off the radio and all lamps that are not needed. This will avoid sparks and help save both batteries. And it could save the radio!
4. Open the hood. See *Hood* ⇨ *17*.

5. Release the four clips for the left and right outer covers.

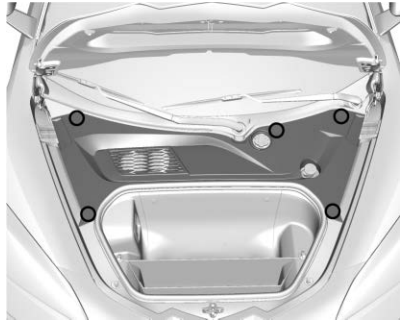

6. Release the five clips and remove the outer cover to access the battery.
7. Locate the battery positive (+) and negative (–) terminals.
8. Check that the jumper cables do not have loose or missing insulation. If they do, you could get a shock. The vehicles could be damaged too.
9. Open the discharged battery positive (+) terminal trim cover and connect one end of the positive (+) cable.
10. Do not let the other end of the positive (+) cable to touch metal. Connect it to the good battery positive (+) terminal.
11. Connect one end of the negative (–) cable to the good battery negative (–) terminal.

    Do not let the other end touch anything until the next step.
12. Connect the other end of the negative (–) cable to the discharged battery negative (–) terminal.
13. Start the vehicle with the good battery and run the engine for a while.
14. Try to start the vehicle that had the discharged battery. If it will not start after a few tries, it probably needs service.

Caution

If the jumper cables are connected or removed in the wrong order, electrical shorting may occur and damage the vehicle. The repairs would not be covered by the vehicle warranty. Always connect and remove the jumper cables in the correct order, making sure that the cables do not touch each other or other metal.

Jumper Cable Removal

Reverse the sequence exactly when removing the jumper cables.

After starting the disabled vehicle and removing the jumper cables, allow it to idle for several minutes.

The power windows may need to be initialized. See "Window Indexing" under *Power Windows* ⇨ *28*.

Towing the Vehicle

Transporting a Disabled Vehicle

Caution

Incorrectly transporting a disabled vehicle may cause damage to the vehicle. Use proper tire straps to secure the vehicle to the flatbed tow truck. Do not strap or hook to any frame, underbody, or suspension component not specified below. Do not move vehicles with drive axle tires on the ground. Damage is not covered by the vehicle warranty.

Caution

The vehicle may be equipped with an electric parking brake and/or an electronic shifter. In the event of a loss of 12-volt battery power, the electric parking brake cannot be released, and the vehicle cannot be shifted to N (Neutral). Tire skates or dollies must be used under the non-rolling tires to prevent damage while loading/unloading the vehicle. Dragging the vehicle will cause damage not covered by the vehicle warranty.

Caution

The vehicle may be equipped with a tow eye. Improper use of the tow eye may cause damage to the vehicle and is not covered by the vehicle warranty.
If equipped, use the tow eye to load the vehicle onto a flatbed tow truck from a flat road surface, or to move the vehicle a very short distance at a walking pace. The tow eye is not designed for off-road recovery. The vehicle must be in N (Neutral) with the electric parking brake released when using the tow eye.

Contact a professional towing service if the disabled vehicle must be transported. GM recommends a flatbed tow truck to transport a disabled vehicle. Use ramps to help reduce approach angles, if necessary.

If equipped, a tow eye may be located near the spare tire or emergency jack. Do not use the tow eye to pull the vehicle from the snow, mud, sand, or ditch. Tow eye threads may have right or left-hand threads. Use caution when installing or removing the tow eye.

The vehicle must be in N (Neutral) and the electric parking brake must be released when loading the vehicle onto a flatbed tow truck.

If equipped, the Front Lift System can be raised with the engine off. With the vehicle in accessory mode and the doors closed, press and hold the Front Lift System button for 10 seconds. See *Front Lift System* ⇨ *214*. After the vehicle is loaded, the front can be lowered by pressing the Front Lift System button again with the doors closed.

After the vehicle is loaded, the front can be lowered by pressing the Front Lift System button again with the doors closed.

- Place the vehicle in N (Neutral) and refer to "Maintaining N (Neutral) with Engine Off" under *Dual Clutch Transmission* ⇨ *195*.
- If the 12-volt battery is dead and/or the engine will not start, the vehicle will not move. Try to jump start the vehicle. Refer to *Jump Starting - North America* ⇨ *290*. If the jump start is successful, retry the "Maintaining N (Neutral) with Engine Off" procedure.
- If jump starting is unsuccessful, the vehicle will not move. Tire skates or dollies must be used under the non-rolling tires to prevent vehicle damage.

Front Tow Eye

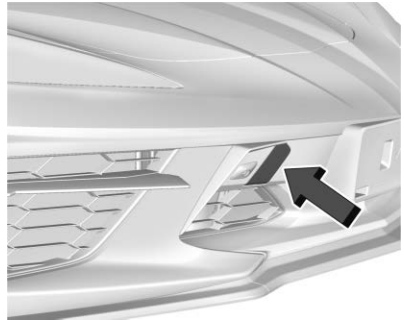

Carefully open the cover by using the small notch that conceals the front tow eye socket.

Install the tow eye into the socket and turn it until it is fully tightened.

When the tow eye is removed, reinstall the cover with the notch in the original position.

Rear Tow Eye

Carefully open the cover by using the small notch that conceals the front tow eye socket.

Install the tow eye into the socket and turn it until it is fully tightened.

When the tow eye is removed, reinstall the cover with the notch in the original position.

Front Attachment Points

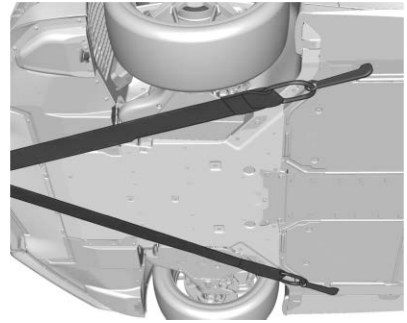

The vehicle is equipped with specific attachment points to be used by the towing provider. These holes may be used to pull the vehicle from a flat road surface onto the flatbed tow truck.

Recreational Vehicle Towing

Caution

Dolly towing or dinghy towing the vehicle may cause damage because of reduced ground clearance. Always put the vehicle on a flatbed truck or trailer.

The vehicle was neither designed nor intended to be towed with any of its wheels on the ground. If the vehicle must be towed, see *Transporting a Disabled Vehicle* ⇨ *293*.

Appearance Care

Exterior Care

Locks

Locks are lubricated at the factory. Use a de-icing agent only when absolutely necessary, and have the locks greased after using. See *Recommended Fluids and Lubricants* ⇨ *310*.

Washing the Vehicle

To preserve the vehicle's finish, wash it often and out of direct sunlight.

Caution

Do not use petroleum-based, acidic, or abrasive cleaning agents as they can damage the vehicle's paint, metal, or plastic parts. If damage occurs, it would not be covered by the vehicle warranty. Approved cleaning products can be obtained from your dealer. Follow all manufacturer directions regarding correct product usage, necessary safety precautions, and appropriate disposal of any vehicle care product.

Caution

Avoid using high-pressure washes closer than 30 cm (12 in) to the surface of the vehicle. Use of power washers exceeding 8 274 kPa (1,200 psi) can result in damage or removal of paint and decals.

Cleaning Underhood Components

Caution

Do not power wash any component under the hood that has this symbol.

This could cause damage that would not be covered by the vehicle warranty.

Solvents or aggressive cleaners may harm underhood components. The usages of these chemicals should be avoided. Recommend water only.

A pressure washer may be used, but care must be utilized. The following criteria must be followed:

- Water pressure must be kept below 14,000 KPa (2,000 PSI).
- Water temperature must be below 80 °C (180 °F).
- Spray nozzle with a 40 degree wide angle spray pattern or wider must be used.
- Nozzle must be kept at least 30 cm (1 ft) away from all surfaces.

Automatic Car Wash

Caution
Automatic car washes can cause damage to the vehicle, wheels, ground effects, and convertible top (if equipped). Do not use automatic car washes due to lack of clearance for the undercarriage, wide rear tires, and wheels.

Hand Wash

Rinse the vehicle well, before washing and after, to remove all cleaning agents completely. If they dry on the surface staining could occur.

Dry the finish with a soft, clean chamois or an all-cotton towel to avoid surface scratches and water spotting.

Finish Care

Application of aftermarket clearcoat sealant/wax materials is not recommended.
If painted surfaces are damaged, see your dealer to have the damage assessed and repaired. Foreign materials such as calcium chloride and other salts, ice melting agents, road oil and tar, tree sap, bird droppings, chemicals from industrial chimneys, etc., can damage the vehicle finish if they remain on painted surfaces. Wash the vehicle as soon as possible. If necessary, use non-abrasive cleaners that are marked safe for painted surfaces to remove foreign matter.

Occasional hand waxing or mild polishing should be done to remove residue from the paint finish. See your dealer for approved cleaning products.

Do not apply waxes or polishes to uncoated plastic, vinyl, rubber, decals, simulated wood, flat paint, or metal mesh grilles as damage can occur.

Caution
Machine compounding or aggressive polishing on a basecoat/clearcoat paint finish may damage it. Use only non-abrasive waxes and polishes that are made for a basecoat/clearcoat paint finish on the vehicle.

To keep the paint finish looking new, keep the vehicle garaged or covered whenever possible.

Protecting Exterior Bright Metal Moldings

Caution
Failure to clean and protect the bright metal moldings can result in a hazy white finish or pitting. This damage would not be covered by the vehicle warranty.

The bright metal moldings on the vehicle are aluminum, chrome, and stainless steel. To prevent damage always follow these cleaning instructions:

- Be sure the molding is cool to the touch before applying any cleaning solution.
- Use only approved cleaning solutions for aluminum, chrome, and stainless steel. Some cleaners are highly acidic or contain alkaline substances and can damage the moldings.
- Always dilute a concentrated cleaner according to the manufacturer's instructions.
- Do not use cleaners that are not intended for automotive use.
- Use a nonabrasive wax on the vehicle after washing to protect and extend the molding finish.

Convertible Top Care

Only lower the top when it is completely dry and avoid leaving the top lowered for extended periods of time to prevent excessive interior weathering.

Carbon Fiber Care

Carbon fiber composite parts can be washed and waxed like any other parts. Use a clear or black pigmented wax. See *Composite Materials* ⇨ *189*.

Cleaning Exterior Lamps/Lenses, Emblems, Decals, and Stripes

Use only lukewarm or cold water, a soft cloth, and a car washing soap to clean exterior lamps, lenses, emblems, decals, and stripes. Follow instructions under "Washing the Vehicle" previously in this section.

Lamp covers are made of plastic, and some have a UV protective coating. Do not clean or wipe them while they are dry.

Do not use any of the following on lamp covers:

- Abrasive or caustic agents
- Washer fluids and other cleaning agents in higher concentrations than suggested by the manufacturer
- Solvents, alcohols, fuels, or other harsh cleaners
- Ice scrapers or other hard items
- Aftermarket appearance caps or covers while the lamps are illuminated, due to excessive heat generated

Caution

Failure to clean lamps properly can cause damage to the lamp cover that would not be covered by the vehicle warranty.

Caution

Using wax on low gloss black finish stripes can increase the gloss level and create a non-uniform finish. Clean low gloss stripes with soap and water only.

Air Intakes - Mesh Grilles

Keep the rear and hood mesh grilles clear of debris. The metal mesh grilles may be hot to the touch after vehicle operation.

Rear Mesh Grille

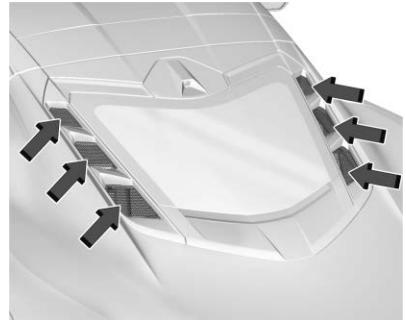

Coupe Mesh Grille

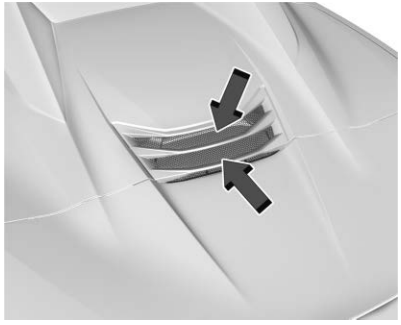

Convertible Mesh Grille

Do not apply wax to the mesh grilles.

Windshield and Wiper Blades

Clean the outside of the windshield with glass cleaner.

Clean rubber blades using lint-free cloth or paper towel soaked with windshield washer fluid or a mild detergent. Wash the windshield thoroughly when cleaning the blades. Bugs, road grime, sap, and a buildup of vehicle wash/wax treatments may cause wiper streaking.

Replace the wiper blades if they are worn or damaged. Damage can be caused by extreme dusty conditions, sand, salt, heat, sun, snow, and ice.

Weatherstrips

Apply weatherstrip lubricant on weatherstrips to make them last longer, seal better, and not stick or squeak. Lubricate weatherstrips at least once a year. Hot, dry climates require more frequent application. Black marks from rubber material on painted surfaces can be removed by rubbing with a clean cloth. See *Recommended Fluids and Lubricants* ⇨ *310*.

Tires

Use a stiff brush with tire cleaner to clean the tires.

Caution

Using petroleum-based tire dressing products on the vehicle may damage the paint finish and/or tires. When applying a tire dressing, always wipe off any overspray from all painted surfaces on the vehicle.

Wheels and Wheel Trim

Use a soft, clean cloth with mild soap and water to clean the wheels. After rinsing thoroughly with clean water, dry with a soft, clean towel. A wax may then be applied.

Caution

To avoid surface damage on wheels and wheel trim, do not use strong soaps, chemicals, abrasive polishes, cleaners, or brushes. Use only GM approved cleaners. Do not drive the vehicle through an automatic car wash that uses silicon carbide tire/wheel cleaning brushes. Damage could occur and the repairs would not be covered by the vehicle warranty.

Carbon Fiber Wheels

If equipped, carbon fiber wheels have a high performance white thermal coating on the rim and back of the spoke. The thermal coating provides a functional purpose and performs best when clean. See “Wheels and Wheel Trim” section above for cleaning instructions. However, even with regular

cleaning, it is expected that brake dust and road grime will darken the high performance thermal coating over time.

⚠ Warning

Altering, removing, or painting over the white thermal coating on carbon fiber wheels can cause the wheels to overheat and become damaged. Damaged wheels could cause a crash. To prevent property damage, personal injury, and/or death, do not change the coating on the carbon fiber wheels.

Caution

Carbon fiber wheels may be damaged if the vehicle is not washed after driving on roads that have been sprayed with magnesium chloride or calcium chloride. These are used on roads for conditions such as dust and ice. Always wash the carbon fiber with soap and water after exposure.

Brake System

Visually inspect brake lines and hoses for proper hook-up, binding, leaks, cracks, chafing, etc. Inspect disc brake pads for wear and rotors for surface condition. Inspect drum brake linings/shoes for wear or cracks.

Inspect other brake parts, including drums, wheel cylinders, calipers, parking brake, master cylinder, brake fluid reservoir, vacuum pipes, electric vacuum pump including bracket and vent hose, if equipped.

If equipped with Z51, inspect brake cooling components. See *Track Events and Competitive Driving* ⇨ *172*.

Steering, Suspension, and Chassis Components

Visually inspect steering, suspension, and chassis components for damaged, loose, or missing parts or signs of wear at least once a year.

Inspect power steering for proper hook-up, binding, leaks, cracks, chafing, etc.

Visually check constant velocity joint boots and axle seals for leaks.

Body Component Lubrication

Lubricate all key lock cylinders, hood hinges, and liftgate hinges, unless the components are plastic. Applying silicone grease on weatherstrips with a clean cloth will make them last longer, seal better, and not stick or squeak.

Underbody Maintenance

At least twice a year, spring and fall, use plain water to flush any corrosive materials from the underbody. Take care to thoroughly clean any areas where mud and other debris can collect.

Do not directly power wash the transfer case and/or front/rear axle output seals. High pressure water can overcome the seals and contaminate the fluid. Contaminated fluid will decrease the life of the transfer case and/or axles and should be replaced.

Body Damage

If the vehicle is damaged and requires sheet metal repair or replacement, make sure the body repair shop applies anti-corrosion material to parts repaired or replaced to restore corrosion protection.

Original manufacturer replacement parts will provide the corrosion protection while maintaining the vehicle warranty.

Finish Damage

Quickly repair minor chips and scratches with touch-up materials available from your dealer. Larger areas of finish damage can be corrected in your dealer's body and paint shop.

Chemical Paint Spotting

Airborne pollutants can fall upon and attack painted vehicle surfaces causing blotchy, ring-shaped discolorations, and small, irregular dark spots etched into the paint surface. See “Finish Care” previously in this section.

Interior Care

To prevent dirt particle abrasions, regularly clean the vehicle's interior. Before using cleaners, read and follow all safety instructions on the label. While cleaning the interior, open the doors and windows to get proper ventilation. Newspapers or dark garments can transfer color to the vehicle’s interior.

Caution

Immediately remove cleaners, hand lotions, sunscreen, and insect repellent from all interior surfaces or permanent damage may result.

Caution

Use cleaners specifically designed for the surfaces being cleaned to prevent permanent damage to the vehicle. Apply all cleaners directly to a cleaning cloth. Do not spray cleaners on any switches or controls.

When using liquid soap cleaners, follow the directions on the specific cleaner or soap solution for dilution instructions.

Caution

To prevent damage:

- Never use a razor or any other sharp object to remove soil from any interior surface
- Never use a brush with stiff bristles.

(Continued)

Caution (Continued)

- Never rub any surface aggressively or with too much pressure.
- Do not get any exposed electrical components wet.
- Do not use laundry detergents or dishwashing soaps with degreasers. Do not use solutions that contain strong or caustic soap.
- Do not heavily saturate the upholstery when cleaning.
- Do not use solvents or cleaners containing solvents.
- Do not use disinfecting wipes that are scented or contain bleach. Do not use wipes or cleaners that show a color transfer to the wipe or change the appearance of the interior surface when used.
- Do not use scented or gel-type hand sanitizers. If hand sanitizer comes in contact with interior surfaces of the vehicle, blot immediately and clean with a soft cloth dampened with a mild soap and water solution.

Interior Glass

To clean, use a microfiber cloth fabric dampened with water. Wipe droplets left behind with a clean dry cloth. If necessary, use a commercial glass cleaner after cleaning with plain water.

Caution

To prevent scratching, never use abrasive cleaners on automotive glass. Abrasive cleaners or aggressive cleaning may damage the rear window defogger.

Cleaning the windshield with water during the first three to six months of ownership will reduce tendency to fog.

Speaker Covers

Vacuum around a speaker cover gently, so that the speaker will not be damaged. Clean spots with water and mild soap.

Coated Moldings

Coated moldings should be cleaned.

- When lightly soiled, wipe with a sponge or soft, lint-free cloth dampened with water.
- When heavily soiled, use warm soapy water.

Vinyl/Rubber

If equipped with vinyl floor and rubber floor mats, use a soft cloth and/or brush dampened with water to remove dust and loose dirt. For more thorough cleaning, use a mild soap and water solution.

⚠ Warning

Do not use cleaners that contain silicone, wax-based products, or cleaners that increase gloss on vinyl/rubber floor and mats. These cleaners can permanently change the appearance and feel of the vinyl/rubber and can make the floor slippery. Your foot could slip while operating the vehicle, and you could lose control, resulting in a crash. You or others could be injured.

Fabric/Carpet/Suede

Start by vacuuming the surface using a soft brush attachment. If a rotating vacuum brush attachment is being used, only use it on the floor carpet. Before cleaning, gently remove as much of the soil as possible:

- Gently blot liquids with a paper towel. Continue blotting until no more soil can be removed.
- For solid soils, remove as much as possible prior to vacuuming.

To clean:

1. Saturate a clean, lint-free colorfast cloth with water. Microfiber cloth is recommended to prevent lint transfer to the fabric or carpet.
2. Remove excess moisture by gently wringing until water does not drip from the cleaning cloth.
3. Start on the outside edge of the soil and gently rub toward the center. Fold the cleaning cloth to a clean area frequently to prevent forcing the soil into the fabric.
4. Continue gently rubbing the soiled area until there is no longer any color transfer from the soil to the cleaning cloth.
5. If the soil is not completely removed, use a mild soap solution followed only by plain water.

If the soil is not completely removed, it may be necessary to use a commercial upholstery cleaner or spot lifter. Test a small hidden area for colorfastness before using a

commercial upholstery cleaner or spot lifter. If ring formation occurs, clean the entire fabric or carpet.

After cleaning, use a paper towel to blot excess moisture.

Cleaning High Gloss Surfaces and Vehicle Information and Radio Displays

Use a microfiber cloth on high gloss surfaces or vehicle displays. First, use a soft bristle brush to remove dirt that can scratch the surface. Then gently clean by rubbing with a microfiber cloth. Never use window cleaners or solvents. Periodically hand wash the microfiber cloth separately, using mild soap. Do not use bleach or fabric softener. Rinse thoroughly and air dry before next use.

Caution

Do not attach a device with a suction cup to the display. This may cause damage and would not be covered by the vehicle warranty.

Instrument Panel, Leather, Vinyl, Other Plastic Surfaces, Low Gloss Paint Surfaces, and Natural Open Pore Wood Surfaces

Use a soft bristle brush to remove dust from knobs and crevices on the instrument cluster. Use a soft microfiber cloth dampened with water to remove dust and loose dirt. For a more thorough cleaning, use a soft microfiber cloth dampened with a mild soap and water solution.

Caution

Soaking or saturating leather, especially perforated leather, as well as other interior surfaces, may cause permanent damage. Wipe excess moisture from these surfaces after cleaning and allow them to dry naturally. Never use heat, steam, or spot removers. Do not use liquids that contain alcohol or solvents on leather seats. Do not use cleaners that contain silicone or wax-based products. Cleaners containing these solvents can permanently change the appearance and feel of leather or soft trim, and are not recommended.

Do not use cleaners that increase gloss, especially on the instrument panel. Reflected glare can decrease visibility through the windshield under certain conditions.

Caution

Use of air fresheners may cause permanent damage to plastics and painted surfaces. If an air freshener comes in contact with any plastic or painted surface in the vehicle, blot immediately and clean with a soft cloth dampened with a mild soap solution. Damage caused by air fresheners would not be covered by the vehicle warranty.

Cargo Cover and Convenience Net

If equipped, wash with warm water and mild detergent. Do not use chlorine bleach. Rinse with cold water, and then dry completely.

Care of Seat Belts

Keep belts clean and dry.

⚠ Warning

Do not bleach or dye seat belt webbing. It may severely weaken the webbing. In a crash, they might not be able to provide adequate protection. Clean and rinse seat belt webbing only with mild soap and lukewarm water. Allow the webbing to dry.

Floor Mats

⚠ Warning

If a floor mat is the wrong size or is not properly installed, it can interfere with the pedals. Interference with the pedals can cause unintended acceleration and/or increased stopping distance which can cause a crash and injury. Make sure the floor mat does not interfere with the pedals.

Use the following guidelines for proper floor mat use:

- The original equipment floor mats are designed for your vehicle. If the floor mats need to be replaced, it is recommended that GM-certified floor mats are purchased. Non-GM floor mats may not fit properly and may interfere with the pedals. Always check that the floor mats do not interfere with the pedals.
- Do not use a floor mat if the vehicle is not equipped with a floor mat retainer on the driver side floor.
- Use the floor mat with the correct side up. Do not turn it over.
- Do not place anything on top of the driver side floor mat.
- Use only a single floor mat on the driver side.
- Do not place one floor mat on top of another.

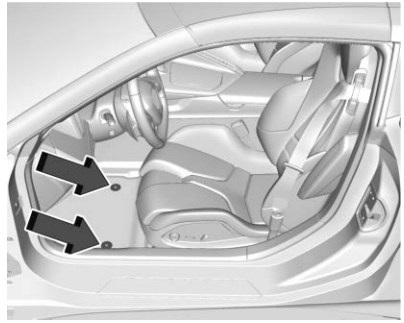

The floor mats are held in place by two retainers.

Installing and Replacing the Floor Mats

1. Pull up on the rear of the floor mat to remove it from the retainers.
2. Reinstall by lining up the openings in the floor mat over the retainers and push down into position.
3. Make sure the floor mat is properly secured in place. Verify the floor mat does not interfere with the pedals.

Cleaning Rubber Floor Mats (All-Weather Mats and Floor Liners)

See “Vinyl/Rubber” under *Interior Care* ⇨ *301* for important cleaning information.

Service and Maintenance

General Information
General Information 305

Maintenance Schedule
Maintenance Schedule 306

Multi-Point Vehicle Inspection (MPVI)
Multi-Point Vehicle Inspection (MPVI) 308

Special Application Services
Special Application Services 309

Recommended Fluids, Lubricants, and Parts
Recommended Fluids and Lubricants 310
Maintenance Replacement Parts 311

Maintenance Records
Maintenance Records 313

General Information

Your vehicle is an important investment. This section describes the required maintenance for the vehicle. Follow this schedule to help protect against major repair expenses resulting from neglect or inadequate maintenance. It may also help to maintain the value of the vehicle if it is sold. It is the responsibility of the owner to have all required maintenance performed.

Your dealer has trained technicians who can perform required maintenance using genuine replacement parts. They have up-to-date tools and equipment for fast and accurate diagnostics. Many dealers have extended evening and Saturday hours, courtesy transportation, and online scheduling to assist with service needs.

Your dealer recognizes the importance of providing competitively priced maintenance and repair services. With trained technicians, the dealer is the place for routine maintenance such as oil changes, tire rotations, and additional maintenance items like tires, brakes, batteries, and wiper blades.

Caution

Damage caused by improper maintenance can lead to costly repairs and may not be covered by the vehicle warranty. Maintenance intervals, checks, inspections, recommended fluids, and lubricants are important to keep the vehicle in good working condition.

Do not have chemical flushes that are not approved by GM performed on the vehicle. The use of flushes, solvents, cleaners, or lubricants that are not approved by GM could damage the vehicle, requiring expensive repairs that are not covered by the vehicle warranty.

The Tire Rotation and Required Services are the responsibility of the vehicle owner. It is recommended to have your dealer perform these services every 12 000 km (7,500 mi). Proper vehicle maintenance helps to keep the vehicle in good working condition, improves fuel economy, and reduces vehicle emissions.

Because of the way people use vehicles, maintenance needs vary. There may need to be more frequent checks and services. The Additional Required Services - Normal are for vehicles that:

- Carry passengers and cargo within recommended limits on the Tire and Loading Information label. See *Vehicle Load Limits* ⇨ *186*.
- Are driven on reasonable road surfaces within legal driving limits.
- Use the recommended fuel. See *Recommended Fuel* ⇨ *227*.

Refer to the information in the Maintenance Schedule Additional Required Services - Normal chart.

The Additional Required Services - Severe are for vehicles that are:

- Mainly driven in heavy city traffic in hot weather.
- Mainly driven in hilly or mountainous terrain.
- Used for high speed or competitive driving.
- Used for taxi, police, or delivery service.

Refer to the information in the Maintenance Schedule Additional Required Services - Severe chart.

⚠ Warning

Performing maintenance work can be dangerous and can cause serious injury. Perform maintenance work only if the required information, proper tools, and equipment are available. If they are not, see your dealer to have a trained technician do the work. See *Doing Your Own Service Work* ⇨ *234*.

Maintenance Schedule

Tire Rotation and Required Services Every 12 000 km (7,500 mi)

Tires are rotated to achieve a more uniform wear for all tires. The first rotation is the most important.

Anytime unusual wear is noticed, rotate the tires as soon as possible, check for proper tire inflation pressure, and check for damaged tires or wheels. If the unusual wear continues after the rotation, check the wheel alignment. See *When It Is Time for New Tires* ⇨ *285* and *Wheel Replacement* ⇨ *288*.

- Perform Multi-Point Vehicle Inspection. See *Multi-Point Vehicle Inspection (MPVI)* ⇨ *308*.
- Lubricate body components. See *Exterior Care* ⇨ *296*.

Additional Required Services – Normal Service

Every 12 000 km (7,500 mi)

- Check engine oil level and oil life percentage. If needed, change engine oil and filter, and reset oil life system. Or when the CHANGE ENGINE OIL SOON message displays, have the engine oil and filter changed within the next 1 000 km (600 mi). If driven under the best conditions, the engine oil life system may not indicate the need for vehicle service for up to a year. The engine oil and filter must be changed at least once a year and the oil life system must be reset. Your trained dealer technician can perform this work. If the engine oil life system is reset accidentally, service the vehicle within 5 000 km (3,000 mi) since the last service. Reset the oil life system when the oil is changed. See *Engine Oil Life System* ⇨ *248*.

- When the REPLACE AT NEXT OIL CHANGE message displays, the engine air filter should be replaced at the next engine oil change. When the REPLACE ENGINE AIR FILTER SOON message displays, the engine air filter should be replaced at the earliest convenience. Reset the engine air filter life system after the engine air filter is replaced. See *Engine Air Filter Life System* ⇨ *250*.
- The initial transmission external canister filter change must be performed at 12 000 km (7,500 mi). This service can be complex. See your dealer.

Caution

The transmission external canister filter must be changed at 12 000 km (7,500 mile) during the break-in period. Failure to replace the external canister filter can cause damage to the transmission and potentially void any warranty.

Every 36 000 km (22,500 mi)

- Replace the passenger compartment air filter. Or every 24 months, whichever comes first. More frequent passenger compartment air filter replacement may be needed if driving in areas with heavy traffic, poor air quality, high dust levels, or environmental allergens. Passenger compartment air filter replacement may also be needed if there is reduced airflow, window fogging, or odors. Your GM dealer can help determine when to replace the filter.
- Change the dual clutch transmission external canister filter. Check the transmission fluid life percentage. If the percentage is less than 10%, replace the fluid and external canister filter. Change the external canister filter every 36 000 km (22,500 mi) thereafter. This service can be complex. See your dealer.

Every 72 000 km (45,000 mi)

- Change the transmission fluid and external canister filter. Change the external canister filter every 36 000 km (22,500 mi) thereafter. This service can be complex. See your dealer.

  Or when the CHANGE TRANSMISSION FLUID SOON message displays, change the fluid and external canister filter within the next 1 000 km (620 mi). Failure to change the transmission fluid at required intervals can lead to reduced transmission performance. The transmission fluid must be changed at least every three years and the Fluid Life System must be reset. Your dealer has trained service technicians who will change the fluid and reset the system. If the system is ever reset accidentally, the fluid must be changed at 72 000 km (45,000 mi) since the last fluid change. See *Dual Clutch Transmission Fluid Life System* ⇨ *249*.

Every 156 000 km (97,500 mi)

- Replace spark plugs. Inspect spark plug wires and/or boots.

Every 161 000 km (100,000 mi)

- Replace hood and/or body lift support gas struts. Or every 10 years, whichever comes first. See *Gas Strut(s)* ⇨ *263*.

Every 240 000 km (150,000 mi)

- Drain and fill engine cooling system. Or every six years, whichever comes first. See *Cooling System* ⇨ *252*.

Additional Required Services – Severe Service

There are no additional required services for severe service for this vehicle. Follow the requirements under normal service.

Owner Checks and Services

Every Five Years

- Replace brake fluid. See *Brake Fluid* ⇨ *260*.
- Replace front lift system fluid (if equipped). See *Recommended Fluids and Lubricants* ⇨ *310*.

Every Seven Years

- Replace Air Conditioning Desiccant every seven years. The air conditioning system requires maintenance every seven years. This service requires replacement of the desiccant to help the longevity and efficient operation of the air conditioning system. This service can be complex. See your dealer.

Multi-Point Vehicle Inspection (MPVI)

A Multi Point Vehicle Inspection (MPVI) completed by a GM dealer technician is a maintenance assessment of your vehicle. The benefit of the MPVI is to identify and inform the customer of service items that require immediate attention and those that may require attention in the future.

The technician will perform the following checks on your vehicle. For a complete list of checks, inspections, and services, see your dealer.

Some items may not apply to your vehicle and/or region.

Diagnostics

- OnStar active, if equipped
- Service history/recall check

Engine Oil and Filter

- Engine oil
- Oil life monitor
  - Reset oil life monitor

Exterior Lights

- Visual inspection

Windshield and Wipers

- Visual inspection

Battery

- Battery visual inspection
- Battery test results
- Battery cables and connections

Systems, Fluids, and Visible Leak Inspection

- Engine oil
- Transmission
- Drive axle
- Transfer case

- Engine cooling system
- Power steering, if equipped
- Fuel system
- Windshield washer fluid

Tire Inspection

- Tire pressure, tread depth, and wear
- Rotation, if applicable
- Alignment check, optional
- Reset tire pressure monitor
- Check tire sealant expiration date, if equipped
- Check spare tire, if equipped

Brakes

- Check brake system

Visible and Functional Inspections

- Seat belt components
- Exhaust system
- Accelerator pedal
- Passenger compartment air filter, if equipped
- Engine air filter
- Hoses
- Belts
- Shocks and struts
- Steering components
- Axle boots or driveshaft and u-joints
- Compartment lift struts, if equipped
- Floor mats secured, no interference with pedals
- Horn
- Ignition lock, if equipped
- Starter switch
- Evaporative control system

Lubricate

- Chassis components

Special Application Services

- Severe Commercial Use Vehicles Only: Lubricate chassis components every oil change.
- Have underbody flushing service performed. See "Underbody Maintenance" in *Exterior Care* ⇨ *296*.

Recommended Fluids, Lubricants, and Parts

Recommended Fluids and Lubricants

Fluids and lubricants identified below by name or specification, including fluids or lubricants not listed here, can be obtained from your dealer.

Usage	Fluid/Lubricant
Chassis Lubrication	Chassis lubricant meeting requirements of NLGI #2, Category LB or GC-LB.
Dual Clutch Transmission	See your dealer.
Engine Coolant	40/60 coolant/water mixture of clean, drinkable water and use only DEX-COOL Coolant. See *Cooling System* ⇨ *252*.
Engine Oil	Engine oil meeting the dexosR specification of the proper SAE viscosity grade. Mobil 1 dexosR full synthetic is recommended. See *Engine Oil (5.5L LT6 Engine)* ⇨ *242* or *Engine Oil (6.2L LT2 Engine)* ⇨ *245*.
Front Lift System (If Equipped)	GM Approved DOT 4 Hydraulic Brake Fluid. See *Front Lift System* ⇨ *214*.
Hydraulic Brake System	GM Approved DOT 4 Hydraulic Brake Fluid.
Windshield Washer	Automotive windshield washer fluid that meets regional freeze protection requirements.

Maintenance Replacement Parts

Replacement parts identified below by name, part number, or specification can be obtained from your dealer.

Part	GM Part Number	ACDelco Part Number
Engine Air Cleaner/Filter		
5.5L V8 Engine (LT6) – Z06*	84378662	A3249C
6.2L V8 Engine (LT2) – Stingray	84321605	A3239C
Engine Oil Filter		
5.5L V8 Engine (LT6) – Z06	12694318	PF2269G
6.2L V8 Engine (LT2) – Stingray	12706595	PF64
Passenger Compartment Air Filter Element	13508023	CF185
Spark Plug		
5.5L V8 Engine (LT6) – Z06	12672174	41-155-IP
6.2L V8 Engine (LT2) – Stingray	12622442	41-149
External Transmission Filter Kit	24045729	—

Part	GM Part Number	ACDelco Part Number
Wiper Blades		
Driver Side – 600 mm (23.6 in)	84566977	—
Passenger Side – 525 mm (20.7 in)	84566978	—

* Quantity of two required per vehicle.

Maintenance Records

After the scheduled services are performed, record the date, odometer reading, who performed the service, and the type of services performed in the boxes provided. Retain all maintenance receipts.

Date	Odometer Reading	Serviced By	Services Performed

Technical Data

Vehicle Identification
Vehicle Identification Number (VIN) 314
Service Parts Identification 314

Vehicle Data
Capacities and Specifications 315
Engine Drive Belt Routing 318

Vehicle Identification

Vehicle Identification Number (VIN)

This legal identifier is in the front corner of the instrument panel, on the driver side of the vehicle. It can be seen through the windshield from outside. The Vehicle Identification Number (VIN) also appears on the Vehicle Certification label and certificates of title and registration.

Engine Identification

The eighth character in the VIN is the engine code. This code identifies the vehicle's engine, specifications, and replacement parts. See “Engine Specifications” under *Capacities and Specifications* ⇨ *315* for the vehicle's engine code.

Service Parts Identification

There will be a large barcode on the certification label located on the driver door or door frame that you can scan for the following information:

- Vehicle Identification Number (VIN)
- Model designation
- Paint information
- Production options

Vehicle Data

Capacities and Specifications

The following approximate capacities are given in metric and English conversions.

See *Recommended Fluids and Lubricants* ⇨ *310*.

Application	Capacities	
	Metric	English
Air Conditioning Refrigerant	For the air conditioning system refrigerant charge type and amount, see the refrigerant label under the hood. See your dealer for more information.	
5.5L V8 Engine (LT6) Engine Cooling System* – Z06	23.5 L	24.8 qt
6.2L V8 Engine (LT2) Engine Cooling System with Performance Package* – Stingray	21.5 L	22.7 qt
6.2L V8 Engine (LT2) Engine Cooling System without Performance Package* – Stingray	20.5 L	21.7 qt
Engine Oil with Filter		
5.5L V8 Engine (LT6) – Z06	7.6 L	8.0 qt
6.2L V8 Engine (LT2) – Stingray	7.1 L	7.5 qt

Application	Capacities	
	Metric	English
Fuel Tank	70.0 L	18.5 gal
Wheel Nut Torque	190 N•m	140 lb ft
All capacities are approximate. When adding, be sure to fill to the approximate level, as recommended in this manual. Recheck fluid level after filling		
*Engine cooling system capacity values are based on the entire cooling system and its components.		

Engine Specifications

Engine	VIN Code	Transmission	Spark Plug Gap	Firing Order
5.5L V8 Engine (LT6) – Z06	3	Dual Clutch Transmission	0.65-0.75 mm (0.026- 0.030 in)	1-4-3-8-7-6-5-2
6.2L V8 Engine (LT2) – Stingray	4	Dual Clutch Transmission	0.95-1.10 mm (0.037-0.043 in)	1-8-7-2-6-5-4-3
Spark plug gaps are preset by the manufacturer. Re-gapping the spark plug is not recommended and can damage the spark plug.				

Engine Data

Engine	Horsepower	Torque	Displacement	Compression Ratio
5.5L V8 Engine (LT6) – Z06	670	460 lb ft	5.5 L	12.5:1
6.2L V8 Engine (LT2) with Performance Exhaust – Stingray	495	470 lb ft	6.2 L	11.5:1
6.2L V8 Engine (LT2) with Standard Exhaust – Stingray	490	465 lb ft	6.2 L	11.5:1

Engine Drive Belt Routing

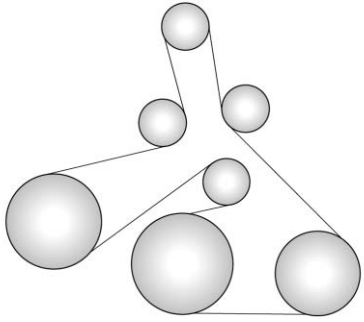

5.5L V8 Engine (LT6) – Z06

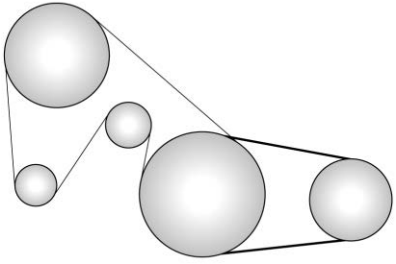

6.2L V8 Engine (LT2) – Stingray

Customer Information

Customer Information

Customer Satisfaction Procedure 319
Customer Assistance Offices 321
Customer Assistance for Text Telephone (TTY) Users 321
Online Account 321
GM Mobility Reimbursement Program 322
Roadside Assistance Program 322
Scheduling Service Appointments 324
Courtesy Transportation Program 324
Collision Damage Repair 325
Publication Ordering Information 327
Radio Frequency Statement 327

Reporting Safety Defects

Reporting Safety Defects to the United States Government 327
Reporting Safety Defects to the Canadian Government 328
Reporting Safety Defects to General Motors 328

Vehicle Data Recording and Privacy

Vehicle Data Recording and Privacy ... 328
Cybersecurity 329
Event Data Recorders 329
OnStar 330
Infotainment System 330

Customer Information

Customer Satisfaction Procedure

Your satisfaction and goodwill are important to your dealer and to Chevrolet. Normally, any concerns with the sales transaction or the operation of the vehicle will be resolved by your dealer's sales or service departments. Sometimes, however, despite the best intentions of all concerned, misunderstandings can occur. If your concern has not been resolved to your satisfaction, the following steps should be taken:

STEP ONE : Discuss your concern with a member of dealership management. Normally, concerns can be quickly resolved at that level. If the matter has already been reviewed with the sales, service, or parts manager, contact the owner of your dealership or the general manager.

STEP TWO : If after contacting a member of dealership management, it appears your concern cannot be resolved by your dealership without further help, in the U.S., call the Chevrolet Customer Assistance Center at 1-800-222-1020. In Canada, call General Motors of Canada Customer Care Centre at 1-800-263-3777 (English), or 1-800-263-7854 (French).

We encourage you to call the toll-free number in order to give your inquiry prompt attention. Have the following information available to give the Customer Assistance representative:

- Vehicle Identification Number (VIN). This is available from the vehicle registration or title, or the plate at the top left of the instrument panel and visible through the windshield.
- Dealership name and location.
- Vehicle delivery date and present mileage.

When contacting Chevrolet, remember that your concern will likely be resolved at a dealer's facility. That is why we suggest following Step One first.

STEP THREE — U.S. Owners : Both General Motors and your dealer are committed to making sure you are completely satisfied with your new vehicle. However, if you continue to remain unsatisfied after following the procedure outlined in Steps One and Two, you can file with the Better Business Bureau (BBB) AUTO LINE Program to enforce your rights.

The BBB AUTO LINE Program is an out-of-court program administered by BBB National Programs, Inc. to settle automotive disputes regarding vehicle repairs or the interpretation of the New Vehicle Limited Warranty. Although you may be required to resort to this informal dispute resolution program prior to filing a court action, use of the program is free of charge and your case will generally be heard within 40 days.
If you do not agree with the decision given in your case, you may reject it and proceed with any other venue for relief available to you.

You may contact the BBB AUTO LINE Program using the toll-free telephone number or write them at the following address:

BBB AUTO LINE a Division of
BBB National Programs, Inc.
1676 International Drive
Suite 550
McLean, VA 22102

Telephone: 1-800-955-5100
www.bbbautoline.org

This program is available in all 50 states and the District of Columbia. Eligibility is limited by vehicle age, mileage, and other factors. General Motors reserves the right to change eligibility limitations and/or discontinue its participation in this program.

STEP THREE — Canadian Owners : In the event that you do not feel your concerns have been addressed after following the procedure outlined in Steps One and Two, General Motors of Canada Company wants you to be aware of its participation in a no-charge Mediation/Arbitration Program. General Motors of Canada Company has committed to binding arbitration of owner disputes involving factory-related vehicle service claims. The program provides for the review of the facts involved by an impartial third party arbiter, and may include an informal hearing before the arbiter. The program is designed so that the entire dispute settlement process, from the time you file your complaint to the final decision, should be completed in about 70 days. We believe our impartial program offers advantages over courts in most jurisdictions because it is informal, quick, and free of charge.

For further information concerning eligibility in the Canadian Motor Vehicle Arbitration Plan (CAMVAP), call toll-free 1-800-207-0685, or call the General Motors Customer Care Centre, 1-800-263-3777 (English), 1-800-263-7854 (French), or write to:

The Mediation/Arbitration Program
c/o Customer Care Centre
General Motors of Canada Company
500 Wentworth Street W
Oshawa, ON L1J 0C5

Your inquiry should be accompanied by the Vehicle Identification Number (VIN).

Customer Assistance Offices

Chevrolet is committed to assisting customers. Visit us online at www.chevrolet.com/support (U.S.) or www.my.chevrolet.ca (Canada) to chat with us or find answers to commonly asked questions, tips, vehicle how-to instructions, and available support.

Need more help? Use the phone numbers or mailing addresses below for additional assistance.

United States and Puerto Rico

Chevrolet Motor Division
Chevrolet Customer Assistance Center
P.O. Box 33170
Detroit, MI 48232-5170

1-800-222-1020
1-800-833-2438 (For Text Telephone Devices (TTYs))
Roadside Assistance: 1-800-243-8872

From U.S. Virgin Islands:

1-800-496-9994

Canada

Customer Care Centre
General Motors of Canada Company
500 Wentworth Street W
Oshawa, ON L1J 0C5

1-800-263-3777 (English)
1-800-263-7854 (French)
1-800-263-3830 (For Text Telephone devices (TTYs))
Roadside Assistance: 1-800-268-6800

Overseas

Please contact the local General Motors Business Unit.

Customer Assistance for Text Telephone (TTY) Users

To assist customers who are deaf, hard of hearing, or speech-impaired and who use Text Telephones (TTYs), Chevrolet has TTY equipment available at its Customer Assistance Center. Any TTY user in the U.S. can communicate with Chevrolet by dialing: 1-800-833-2438. TTY users in Canada can dial 1-800-263-3830.

Online Account

Create a Chevrolet Account (U.S.) at chevrolet.com

Learn more about your vehicle features, shop for and manage your connected services and OnStar plans, and access diagnostic information specific to your vehicle.

Membership Benefits

: Download owner's manuals and view vehicle-specific how-to videos.

: View maintenance schedules, alerts, and Vehicle Diagnostic Information. Schedule service appointments.

: View service records from your dealership and add your own.

: Select a preferred dealer and view locations, maps, phone numbers, and hours.

: Track your vehicle's warranty information.

: View active recalls by Vehicle Identification Number (VIN). See *Vehicle Identification Number (VIN)* ⇨ *314*.

: Manage your profile and payment information. View your GM Rewards Card earnings and My Chevrolet Rewards points.

: Chat with online help representatives.

Visit chevrolet.com and create an account today.

Chevrolet Owner Centre (Canada) mychevrolet.ca

Visit the Chevrolet Owner Centre at mychevrolet.ca (English) or my.chevrolet.ca (French) to access similar benefits to the U.S. site.

GM Mobility Reimbursement Program

GENERAL MOTORS MOBILITY

This program is available to qualified applicants for cost reimbursement, up to certain limits, of eligible aftermarket adaptive equipment required for the vehicle, such as hand controls or a wheelchair/scooter lift for the vehicle.

To learn about the GM Mobility program, see www.gmmobility.com or call the GM Mobility Assistance Center at 1-800-323-9935. Text Telephone (TTY) users, call 1-800-833-9935.

General Motors of Canada also has a Mobility program. See www.gm.ca, or call 1-800-GM-DRIVE (800-463-7483) for details. TTY users call 1-800-263-3830.

Roadside Assistance Program

For U.S.-purchased vehicles, call 1-800-243-8872. (Text Telephone (TTY): 1-888-889-2438.)

For Canadian-purchased vehicles, call 1-800-268-6800.

Service is available 24 hours a day, 365 days a year.

Calling for Assistance

When calling Roadside Assistance, have the following information ready:

- Your name, home address, and home telephone number
- Telephone number of your location
- Location of the vehicle
- Model, year, color, and license plate number of the vehicle
- Odometer reading, Vehicle Identification Number (VIN), and delivery date of the vehicle
- Description of the problem

Coverage

Services are provided for the duration of the vehicle's powertrain warranty.

In the U.S., anyone driving the vehicle is covered. In Canada, a person driving the vehicle without permission from the owner is not covered.

Roadside Assistance is not a part of the New Vehicle Limited Warranty. General Motors North America and Chevrolet reserve the right to make any changes or discontinue the Roadside Assistance program at any time without notification.

General Motors North America and Chevrolet reserve the right to limit services or payment to an owner or driver if they decide the claims are made too often, or the same type of claim is made many times.

Services Provided

- **Emergency Fuel Delivery:** Delivery of enough fuel for the vehicle to get to the nearest service station.
- **Lock-Out Service:** Service to unlock the vehicle if you are locked out. A remote unlock may be available if you have OnStar. For security reasons, the driver must present identification before this service is given.
- **Emergency Tow from a Public Road or Highway:** Tow to the nearest Chevrolet dealer for warranty service, or if the vehicle was in a crash and cannot be driven. Assistance is not given when the vehicle is stuck in the sand, mud, or snow.
- **Flat Tire Change:** Service to change a flat tire with the spare tire. The spare tire, if equipped, must be in good condition and properly inflated. It is the owner's responsibility for the repair or replacement of the tire if it is not covered by the warranty.
- **Battery Jump Start:** Service to jump start a dead battery.
- **Trip Interruption Benefits and Assistance:** If your trip is interrupted due to a warranty event, incidental expenses may be reimbursed within the Powertrain warranty period. Items considered are reasonable and customary hotel, meals, rental car, or a vehicle being delivered back to the customer, up to 500 miles.

Services Not Included in Roadside Assistance

- Impound towing caused by violation of any laws
- Legal fines
- Mounting, dismounting, or changing of snow tires, chains, or other traction devices

Service is not provided if a vehicle is in an area that is not accessible to the service vehicle or is not a regularly traveled or maintained public road, which includes ice and winter roads. Off-road use is not covered.

Services Specific to Canadian-Purchased Vehicles

- **Fuel Delivery:** Reimbursement is up to 7 liters. Propane and other fuels are not provided through this service.
- **Lock-Out Service:** Vehicle registration is required.
- **Trip Interruption Benefits and Assistance:** Must be over 150 km from where your trip was started to qualify. Pre-authorization, original detailed receipts, and a copy of the repair orders are required. Once authorization has been

received, the Roadside Assistance advisor will help to make arrangements and explain how to receive payment.

- **Alternative Service:** If assistance cannot be provided right away, the Roadside Assistance advisor may give permission to get local emergency road service. You will receive payment, up to $100, after sending the original receipt to Roadside Assistance. Mechanical failures may be covered, however any cost for parts and labor for repairs not covered by the warranty are the owner responsibility.

Scheduling Service Appointments

When the vehicle requires warranty service, contact your dealer and request an appointment. By scheduling a service appointment and advising the service consultant of your transportation needs, your dealer can help minimize your inconvenience.

If the vehicle cannot be scheduled into the service department immediately, keep driving it until it can be scheduled for service, unless, of course, the problem is safety related. If it is, please call your dealership, let them know this, and ask for instructions.

If your dealer requests you to bring the vehicle for service, you are urged to do so as early in the work day as possible to allow for same-day repair.

Courtesy Transportation Program

To enhance your ownership experience, we and our participating dealers are proud to offer Courtesy Transportation, a customer support program for vehicles with the Bumper-to-Bumper (Base Warranty Coverage period in Canada), Federal Emission, Extended Powertrain or Electric specific warranties in both the U.S. and Canada.

Several Courtesy Transportation options are available to assist in reducing inconvenience when warranty repairs are required.

Courtesy Transportation is not a part of the New Vehicle Limited Warranty. A separate manual entitled “Limited Warranty and Owner Assistance Information” produced for new vehicles provides detailed warranty coverage information.

Transportation Options

Warranty service can generally be completed while you wait. However, if you are unable to do so, your dealer may offer the following transportation options:

Shuttle Service

This includes one-way or round-trip shuttle service within reasonable time and distance parameters of your dealer's area.

Public Transportation or Fuel Reimbursement

If overnight warranty repairs are needed, and public transportation is used, the expense must be supported by original receipts and within the maximum amount allowed by GM. If U.S. customers arrange their own transportation, limited reimbursement for reasonable fuel expenses may be available. Claim amounts should reflect actual costs and be supported by original receipts. See your dealer for information.

Courtesy Rental Vehicle

For an overnight warranty repair, the dealer may provide an available courtesy rental vehicle or provide for reimbursement of a rental vehicle. Reimbursement is limited and must be supported by original receipts as

well as a signed and completed rental agreement and meet state/provincial, local, and rental vehicle provider requirements. Requirements vary and may include minimum age requirements, insurance coverage, credit card, etc. Additional fees such as fuel, rental vehicle insurance, taxes, levies, usage fees, excessive mileage, or rental usage beyond the completion of the repair are also your responsibility.

It may not be possible to provide a like vehicle as a courtesy rental.

Additional Program Information

All program options, such as shuttle service, may not be available at every dealer. Contact your dealer for specific availability.

General Motors reserves the right to unilaterally modify, change, or discontinue Courtesy Transportation at any time and to resolve all questions of claim eligibility pursuant to the terms and conditions described herein at its sole discretion.

Collision Damage Repair

If the vehicle is involved in a collision and it is damaged, have the damage repaired by a qualified technician using the proper equipment and quality replacement parts. Poorly performed collision repairs diminish the vehicle resale value, and safety performance can be compromised in subsequent collisions.

Collision Parts

Genuine GM Collision parts are new parts made with the same materials and construction methods as the parts with which the vehicle was originally built. Genuine GM Collision parts are the best choice to ensure that the vehicle's designed appearance, durability, and safety are preserved. The use of Genuine GM parts can help maintain the GM New Vehicle Limited Warranty.

Recycled original equipment parts may also be used for repair. These parts are typically removed from vehicles that were total losses in prior crashes. In most cases, the parts being recycled are from undamaged sections of the vehicle. A recycled original equipment GM part may be an acceptable choice to maintain the vehicle's originally designed appearance and safety performance; however, the history of these parts is not known. Such parts are not covered by the GM New Vehicle Limited Warranty, and any related failures are not covered by that warranty.

Aftermarket collision parts are also available. These are made by companies other than GM and may not have been tested for the vehicle. As a result, these parts may fit poorly, exhibit premature durability/corrosion problems, and may not perform properly in subsequent collisions. Aftermarket parts are not covered by the GM New Vehicle Limited Warranty, and any vehicle failure related to such parts is not covered by that warranty.

Repair Facility

GM also recommends that you choose a collision repair facility that meets your needs before you ever need collision repairs. Your dealer may have a collision repair center with GM-trained technicians and state-of-the-art equipment, or be able to recommend a collision repair center that has GM-trained technicians and comparable equipment.

Insuring the Vehicle

Protect your investment in the GM vehicle with comprehensive and collision insurance coverage. There are significant differences in the quality of coverage afforded by various insurance policy terms. Many insurance policies provide reduced protection to the

GM vehicle by limiting compensation for damage repairs through the use of aftermarket collision parts. Some insurance companies will not specify aftermarket collision parts. When purchasing insurance, we recommend that you ensure that the vehicle will be repaired with GM original equipment collision parts. If such insurance coverage is not available from your current insurance carrier, consider switching to another insurance carrier.

If the vehicle is leased, the leasing company may require you to have insurance that ensures repairs with Genuine GM Original Equipment Manufacturer (OEM) parts or Genuine Manufacturer replacement parts. Read the lease carefully, as you may be charged at the end of the lease for poor quality repairs.

If a Crash Occurs

If there has been an injury, call emergency services for help. Do not leave the scene of a crash until all matters have been taken care of. Move the vehicle only if its position puts you in danger, or you are instructed to move it by a police officer.

Give only the necessary information to police and other parties involved in the crash.

For emergency towing see *Roadside Assistance Program* ⇨ *322*.

Gather the following information:

- Driver name, address, and telephone number
- Driver license number
- Owner name, address, and telephone number
- Vehicle license plate number
- Vehicle make, model, and model year
- Vehicle Identification Number (VIN)
- Insurance company and policy number
- General description of the damage to the other vehicle

Choose a reputable repair facility that uses quality replacement parts. See “Collision Parts” earlier in this section.

If the airbag has inflated, see *What Will You See after an Airbag Inflates?* ⇨ *55*.

Managing the Vehicle Damage Repair Process

In the event that the vehicle requires damage repairs, GM recommends that you take an active role in its repair. If you have a pre-determined repair facility of choice, take the vehicle there, or have it towed there. Specify to the facility that any required replacement collision parts be original equipment parts, either new Genuine GM parts or recycled original GM parts. Remember, recycled parts will not be covered by the GM vehicle warranty.

Insurance pays the bill for the repair, but you must live with the repair. Depending on your policy limits, your insurance company may initially value the repair using aftermarket parts. Discuss this with the repair professional, and insist on Genuine GM parts. Remember, if the vehicle is leased, you may be obligated to have the vehicle repaired with Genuine GM parts, even if your insurance coverage does not pay the full cost.

If another party's insurance company is paying for the repairs, you are not obligated to accept a repair valuation based on that insurance company's collision policy repair limits, as you have no contractual limits

with that company. In such cases, you can have control of the repair and parts choices as long as the cost stays within reasonable limits.

Publication Ordering Information

Service Manuals

Service manuals have the diagnosis and repair information on the engine/propulsion, transmission, axle, suspension, brakes, electrical system, steering system, body, etc.

Customer Literature

Owner's manuals are written specifically for owners and are intended to provide basic operational information about the vehicle. The owner's manual includes the Maintenance Schedule for all models.

Customer literature publications available for purchase include owner's manuals, warranty manuals, and portfolios. Portfolios include an owner's manual, warranty manual, if applicable, and zip lock bag or pouch.

Current and Past Models

Service manuals and customer literature are available for many current and past model year GM vehicles.

To order, call 1-800-551-4123 Monday–Friday, 8:00 a.m.–6:00 p.m. Eastern Time

For credit card orders only (VISA, MasterCard, or Discover), see Helm, Inc. at: www.helminc.com.

To order by mail, write to:

Helm, Incorporated
Attention: Customer Service
47911 Halyard Drive
Plymouth, MI 48170

Make checks payable in U.S. funds.

Radio Frequency Statement

This vehicle uses license-exempt transmitters / receivers / systems that operate on a radio frequency that complies with Part 15/Part 18 of the Federal Communications Commission (FCC) rules and with Innovation, Science and Economic Development (ISED) Canada's license-exempt RSS(s) / RSP-100 / ICES-GEN.

Operation is subject to the following two conditions:

1. The device may not cause harmful interference.
2. The device must accept any interference received, including interference that may cause undesired operation of the device.

Changes or modifications to any of these systems by other than an authorized service facility could void authorization to use this equipment.

Reporting Safety Defects

Reporting Safety Defects to the United States Government

If you believe that your vehicle has a defect which could cause a crash or could cause injury or death, you should immediately inform the National Highway Traffic Safety Administration (NHTSA) in addition to notifying General Motors.

If NHTSA receives similar complaints, it may open an investigation, and if it finds that a safety defect exists in a group of vehicles, it may order a recall and remedy campaign. However, NHTSA cannot become involved in individual problems between you, your dealer, or General Motors.

To contact NHTSA, you may call the Vehicle Safety Hotline toll-free at 1-888-327-4236 (TTY: 1-800-424-9153); go to *https://www.safercar.gov;* or write to:

Administrator, NHTSA
1200 New Jersey Avenue, S.E.
Washington, D.C. 20590

You can also obtain other information about motor vehicle safety from *https://www.safercar.gov*.

Reporting Safety Defects to the Canadian Government

If you live in Canada, and you believe that the vehicle has a safety defect, notify Transport Canada immediately, and notify General Motors of Canada Company. Call Transport Canada at 1-800-333-0510; go to:

www.tc.gc.ca/recalls (English)

www.tc.gc.ca/rappels (French)

or write to:

Transport Canada
Motor Vehicle Safety Directorate
Defect Investigations and Recalls Division
80 Noel Street
Gatineau, QC J8Z 0A1

Reporting Safety Defects to General Motors

In addition to notifying NHTSA (or Transport Canada) in a situation like this, notify General Motors.

In the U.S., call 1-800-222-1020, or write:

Chevrolet Motor Division
Chevrolet Customer Assistance Center
P.O. Box 33170
Detroit, MI 48232-5170

In Canada, call 1-800-263-3777 (English) or 1-800-263-7854 (French), or write:

Customer Care Centre
General Motors of Canada Company
500 Wentworth Street W
Oshawa, ON L1J 0C5

In Mexico, call 800-466-0811 or 800-508-0000.

In other Central America and Caribbean Countries, call 52-555-901-2369.

Vehicle Data Recording and Privacy

The vehicle has a number of computers that record information about the vehicle's performance and how it is driven or used. For example, the vehicle uses computer modules to monitor and control engine and transmission performance, to monitor the conditions for airbag deployment and deploy them in a crash, and, if equipped, to provide antilock braking to help the driver control the vehicle. These modules may store data to help the dealer technician service the vehicle or to help GM improve safety or features. Some modules may also store data about how the vehicle is operated, such as rate of fuel consumption or average speed. These modules may retain personal preferences, such as radio presets, seat positions, and temperature settings.

Cybersecurity

GM collects information about the use of your vehicle including operational and safety related information. We collect this information to provide, evaluate, improve, and troubleshoot our products and services and to develop new products and services. The protection of vehicle electronics systems and customer data from unauthorized outside electronic access or control is important to GM. GM maintains appropriate security standards, practices, guidelines and controls aimed at defending the vehicle and the vehicle service ecosystem against unauthorized electronic access, detecting possible malicious activity in related networks, and responding to suspected cybersecurity incidents in a timely, coordinated and effective manner. Security incidents could impact your safety or compromise your private data. To minimize security risks, please do not connect your vehicle electronic systems to unauthorized devices or connect your vehicle to any unknown or untrusted networks (such as Bluetooth, WIFI or similar technology). In the event you suspect any security incident impacting your data or the safe operation of your vehicle, please stop operating your vehicle and contact your dealer.

Event Data Recorders

This vehicle is equipped with an Event Data Recorder (EDR). The main purpose of an EDR is to record, in certain crash or near crash-like situations, such as an air bag deployment or hitting a road obstacle, data that will assist in understanding how a vehicle's systems performed. The EDR is designed to record data related to vehicle dynamics and safety systems for a short period of time, typically 30 seconds or less. The EDR in this vehicle is designed to record such data as:

- How various systems in your vehicle were operating;
- Whether or not the driver and passenger safety belts were buckled/fastened;
- How far (if at all) the driver was depressing the accelerator and/or brake pedal; and,
- How fast the vehicle was traveling.

These data can help provide a better understanding of the circumstances in which crashes and injuries occur.

Note

EDR data are recorded by your vehicle only if a non-trivial crash situation occurs; no data are recorded by the EDR under normal driving conditions and no personal data (e.g., name, gender, age, and crash location) are recorded. However, other parties, such as law enforcement, could combine the EDR data with the type of personally identifying data routinely acquired during a crash investigation.

To read data recorded by an EDR, special equipment is required, and access to the vehicle or the EDR is needed. In addition to the vehicle manufacturer, other parties, such as law enforcement, that have the special equipment, can read the information if they have access to the vehicle or the EDR.

GM will not access these data or share it with others except: with the consent of the vehicle owner or, if the vehicle is leased, with the consent of the lessee; in response to an official request by police or similar government office; as part of GM's defense of litigation through the discovery process; or, as permitted by law. Data that GM collects or receives may also be used for GM research needs or may be made available to others for research purposes, where a need is shown and the data is not tied to a specific vehicle or vehicle owner.

OnStar

If the vehicle is equipped with OnStar and has an active service plan, additional data may be collected and transmitted through the OnStar system. This includes information about the vehicle's operation; collisions involving the vehicle; the use of the vehicle and its features, including infotainment; and the location and approximate GPS speed of the vehicle. Refer to the OnStar Terms and Conditions and Privacy Statement on the OnStar website.

See *OnStar Additional Information* ⇨ *333*.

Infotainment System

If the vehicle is equipped with a navigation system as part of the infotainment system, use of the system may result in the storage of destinations, addresses, telephone numbers, and other trip information. See the infotainment section for information on stored data and for deletion instructions.

OnStar

OnStar Overview
OnStar Overview 331

OnStar Services
Emergency 332
Security 332

OnStar Additional Information
OnStar Additional Information 333

OnStar Overview

Voice Command Button

Blue OnStar Button

Red Emergency Button

This vehicle may be equipped with a comprehensive, in-vehicle system that can connect to an OnStar Advisor for Emergency, Security, Navigation, Connections, and Diagnostics Services. OnStar services may require a paid service plan and data plan. OnStar requires the vehicle battery and electrical system, cellular service, and GPS satellite signals to be available and operating. OnStar acts as a link to existing emergency service providers. OnStar may collect information about you and your vehicle, including location information. See OnStar User Terms, Privacy Statement, and Software Terms for more details including system limitations at www.onstar.com (U.S.) or www.onstar.ca (Canada).

The OnStar system status light is next to the OnStar buttons. If the status light is:

- Solid Green: System is ready.
- Flashing Green: On a call.
- Red: Indicates a problem.
- Off: System is off. Press twice to speak with an OnStar Advisor.

Press or call 1-888-4ONSTAR (1-888-466-7827) to speak to an Advisor.

Functionality of the Voice Command button may vary by vehicle and region.

Press to:

- Open the OnStar app on the infotainment display. If equipped, the infotainment system has OnStar controls in the embedded OnStar app on the Home Page. Most OnStar functions that can be performed with the buttons can be done using the app. To open the app, touch the OnStar icon on the Home Page. App updates require a corresponding service plan. Features vary by region and model. Features are subject to change. For more information, see my.chevrolet.com/learn or press .

Or

- Give OnStar Turn-by-Turn Navigation voice commands.
- Obtain and customize the Wi-Fi hotspot name or SSID and password, if equipped.

Press On to connect to an Advisor to:

- Verify account information or update contact information.
- Get driving directions.
- Receive a Diagnostic check of the vehicle's key operating systems.
- Receive Roadside Assistance.
- Manage Wi-Fi Settings, if equipped.

Press SOS to get a priority connection to an OnStar Advisor available 24/7 to:

- Get help for an emergency.
- Be a Good Samaritan or respond to an AMBER Alert.
- Get assistance in severe weather or other crisis situations and find evacuation routes.

OnStar Services

Emergency

Emergency Services require an active safety and security plan. With Automatic Crash Response, built-in sensors can automatically alert a specially trained OnStar Advisor who is immediately connected in to the vehicle to help.

Press SOS for a priority connection to an OnStar Advisor who can contact emergency service providers, direct them to your exact location, and relay important information.

With OnStar Crisis Assist, specially trained Advisors are available 24 hours a day, 7 days a week, to provide a central point of contact, assistance, and information during a crisis.

With Roadside Assistance, Advisors can locate a nearby service provider to help with a flat tire, a battery jump, or an empty gas tank.

Security

If equipped, OnStar provides these services:

- With Stolen Vehicle Assistance, OnStar Advisors can use GPS to pinpoint the vehicle and help authorities quickly recover it.
- With Remote Ignition Block, if equipped, OnStar can block the vehicle from being restarted.
- With Stolen Vehicle Slowdown, if equipped, OnStar can work with law enforcement to gradually slow the vehicle down.

Theft Alarm Notification

If equipped, if the doors are locked and the vehicle alarm sounds, a notification by text, e-mail, or phone call will be sent. If the vehicle is stolen, an OnStar Advisor can work with authorities to recover the vehicle.

OnStar Additional Information

In-Vehicle Audio Messages

Audio messages may play important information at the following times:

- Prior to vehicle purchase. Press to set up an account.
- After change in ownership and at 90 days.

Transferring Service

Press to request account transfer eligibility information. The Advisor can cancel or change account information.

Selling/Transferring the Vehicle

Call 1-888-4ONSTAR (1-888-466-7827) immediately to terminate your OnStar or connected services if the vehicle is disposed of, sold, transferred, or if the lease ends.

Reactivation for Subsequent Owners

Press and follow the prompts to speak to an Advisor as soon as possible. The Advisor will update vehicle records and explain OnStar or connected service options.

How OnStar Service Works

Automatic Crash Response, Emergency Services, Crisis Assist, Stolen Vehicle Assistance, Remote Services, and Roadside Assistance are available on most vehicles. Not all OnStar services are available everywhere or on all vehicles. For more information, a full description of OnStar services, system limitations, and OnStar User Terms, Privacy Statement, and Software Terms:

- Call 1-888-4ONSTAR (1-888-466-7827).
- See www.onstar.com (U.S.).
- See www.onstar.ca (Canada).
- Call TTY 1-877-248-2080.
- Press to speak with an Advisor.

OnStar or connected services cannot work unless the vehicle is in a place where OnStar has an agreement with a wireless service provider for service in that area. The wireless service provider must also have coverage, network capacity, reception, and technology compatible with OnStar or connected services. Service involving location information about the vehicle cannot work unless GPS signals are available, unobstructed, and compatible with the OnStar hardware. OnStar or connected services may not work if the OnStar equipment is not properly installed or it has not been properly maintained. If equipment or software is added, connected, or modified, OnStar or connected services may not work. Other problems beyond the control of OnStar — such as hills, tall buildings, tunnels, weather, electrical system design and architecture of the vehicle, damage to the vehicle in a crash, or wireless phone network congestion or jamming — may prevent service.

See *Radio Frequency Statement* ⇨ *327*.

Services for People with Disabilities

Advisors provide services to help with physical disabilities and medical conditions.

Press to help:

- Locate a gas station with an attendant to pump gas.
- Find a hotel, restaurant, etc., that meets accessibility needs.
- Provide directions to the closest hospital or pharmacy in urgent situations.

TTY Users

OnStar has the ability to communicate to deaf, hard-of-hearing, or speech-impaired customers while in the vehicle. The available TTY system can provide in-vehicle access to all OnStar services, except Virtual Advisor and OnStar Turn-by-Turn Navigation.

If equipped, TTY mode can be turned on or off by touching Settings, then Apps, and then Phone. When TTY mode is on, phone calls can be made or received with OnStar using the infotainment display.

OnStar Personal Identification Number (PIN)

A PIN is needed to access some OnStar services. The PIN will need to be changed the first time when speaking with an Advisor. To change the OnStar PIN, contact an OnStar Advisor by pressing or calling 1-888-4ONSTAR.

Warranty

OnStar equipment may be warranted as part of the vehicle warranty.

Languages

The vehicle can be programmed to respond in multiple languages. Press and ask for an Advisor. Advisors are available in English, Spanish, and French. Available languages may vary by country.

Potential Issues

OnStar cannot perform Remote Door Unlock or Stolen Vehicle Assistance after the vehicle has been off continuously for an extended period of time without an ignition cycle. To find out the duration of time that applies for the vehicle, contact an OnStar Advisor by pressing or calling 1-888-4ONSTAR. If the vehicle has not been started for an extended period of time, OnStar can contact Roadside Assistance or a locksmith to help gain access to the vehicle.

Global Positioning System (GPS)

- Obstruction of the GPS can occur in a large city with tall buildings; in parking garages; around airports; in tunnels and underpasses; or in an area with very dense trees. If GPS signals are not available, the OnStar system should still operate to call OnStar. However, OnStar could have difficulty identifying the exact location.
- In emergency situations, OnStar can use the last stored GPS location to send to emergency responders.

A temporary loss of GPS can cause loss of the ability to send a Turn-by-Turn Navigation route. The Advisor may give a verbal route or may ask for a call back after the vehicle is driven into an open area.

Cellular and GPS Antennas

Cellular reception is required for OnStar to send remote signals to the vehicle. Do not place items over or near the antenna to prevent blocking cellular and GPS signal reception.

Unable to Connect to OnStar Message

If there is limited cellular coverage or the cellular network has reached maximum capacity, this message may come on. Press to try the call again or try again after driving a few miles into another cellular area.

Vehicle and Power Issues

OnStar services require a vehicle electrical system, wireless service, and GPS satellite technologies to be available and operating for features to function properly. These systems may not operate if the battery is discharged or disconnected.

Add-on Electrical Equipment

The OnStar system is integrated into the electrical architecture of the vehicle. Do not add any electrical equipment. See *Add-On Electrical Equipment* ⇨ *230*. Added electrical equipment may interfere with the operation of the OnStar system and cause it to not operate.

Vehicle Software Updates

OnStar or GM may remotely deliver software updates or changes to the vehicle without further notice or consent. These updates or changes may enhance or maintain safety, security, or the operation of the vehicle or the vehicle systems. Software updates or changes may affect or erase data or settings that are stored in the vehicle, such as saved navigation destinations or pre-set radio stations. Neither OnStar nor GM is responsible for any affected or erased data or settings. These updates or changes may also collect personal information. Such collection is described in the OnStar privacy statement or separately disclosed at the time of installation. These updates or changes may also cause a system to automatically communicate with GM servers to collect information about vehicle system status, identify whether updates or changes are available, or deliver updates or changes. An active OnStar agreement constitutes consent to these software updates or changes and agreement that either OnStar or GM may remotely deliver them to the vehicle.

Privacy

The complete OnStar Privacy Statement may be found at www.onstar.com (U.S.), or www.onstar.ca (Canada). We recommend that you review it. If you have any questions, call 1-888-4ONSTAR (1-888-466-7827) or press to speak with an Advisor. Users of wireless communications are cautioned that the privacy of any information sent via wireless cellular communications cannot be assured. Third parties may unlawfully intercept or access transmissions and private communications without consent.

OnStar - Software Acknowledgements

To obtain the source code under GPL, LGPL, MPL, and other open source licenses, that is contained in this product, please visit https://opensource.lge.com. In addition to the source code, all referred license terms, warranty disclaimers, and copyright notices are available for download. This offer is valid for a period of three years after our last shipment of this product. This offer is valid to anyone in receipt of this information.

*Provided through LG Electronics Inc., who is solely responsible for provisions of related OSS compliance.

Connected Services

Connected Services

Navigation 336
Connections 336
Diagnostics 338

Connected Services

Navigation

Navigation requires a specific OnStar or connected service plan.

Press On to receive Turn-by-Turn directions or have them sent to the vehicle's navigation screen, if equipped. Select Turn-by-Turn Directions from the Services tab of the OnStar app to call an Advisor or select a recent or favorite destination. Touch the navigation icons to select home, address, or place. A destination transfer from OnStar will show the detail view of the destination when it is transferred from OnStar to the Navigation application. See www.onstar.com for a coverage map. Services vary by model. Map coverage is available in the United States and Canada.

Turn-by-Turn Navigation

1. Press On to connect to an Advisor.
2. Request directions to be downloaded to the vehicle.
3. Follow the voice-guided commands.

Using Voice Commands During a Planned Route

Functionality of the Voice Command button, if equipped, may vary by vehicle and region. For some vehicles, press to open the OnStar app on the infotainment display.

Send Destination to Vehicle

Directions can be sent to the vehicle's navigation screen, if equipped.

Press On, then ask the Advisor to download directions to the vehicle's navigation system, if equipped. After the call ends, the navigation screen will provide prompts to begin driving directions. Routes that are sent to the navigation screen can only be canceled through the navigation system.

See www.onstar.com (U.S.) or www.onstar.ca (Canada).

Connections

The following services help with staying connected.

For coverage maps, see www.onstar.com (U.S.) or www.onstar.ca (Canada).

Ensuring Security

- Change the default passwords for the Wi-Fi hotspot and myChevrolet mobile application. Make these passwords different from each other and use a combination of letters and numbers to increase the security.
- Change the default name of the SSID (Service Set Identifier). This is your network's name that is visible to other wireless devices. Choose a unique name and avoid family names or vehicle descriptions.

Wi-Fi Hotspot (If Equipped)

The vehicle may have a built-in Wi-Fi hotspot that provides access to the Internet and web content at 4G LTE speed. Up to seven mobile devices can be connected. A data plan is required. Use the in-vehicle controls only when it is safe to do so.

1. To retrieve Wi-Fi hotspot information, press to open the OnStar app on the infotainment display, then select Wi-Fi Hotspot. On some vehicles, touch Wi-Fi or Wi-Fi Settings on the screen.
2. The Wi-Fi settings will display the Wi-Fi hotspot name (SSID), password, and on some vehicles, the connection type (no Internet connection, 3G, 4G, 4G LTE), and signal quality (poor, good, excellent). The LTE icon shows connection to Wi-Fi. It is possible that the icon may not illuminate even though the vehicle has an active connection.
3. To change the SSID or password, press or call 1-888-4ONSTAR to connect with an Advisor. On some vehicles, the SSID and password can be changed in the Wi-Fi Hotspot menu.

After initial set-up, your vehicle's Wi-Fi hotspot will connect automatically to your mobile devices. Manage data usage by turning Wi-Fi on or off on your mobile device, using the myChevrolet mobile app, or by contacting an OnStar Advisor. On some vehicles, Wi-Fi can also be managed from the Wi-Fi Hotspot menu.

MyChevrolet Mobile App (If Available)

Download the myChevrolet mobile app to compatible Apple and Android smartphones. Chevrolet users can access the following services from a smartphone:

- Remotely start/stop the vehicle, if factory-equipped.
- Lock/unlock doors, if equipped with automatic locks.
- Activate the horn and lamps.
- Check the vehicle's fuel level, oil life, or tire pressure, if factory-equipped with the Tire Pressure Monitor System.
- Send destinations to the vehicle.
- Locate the vehicle on a map (U.S. market only).
- Turn the vehicle's Wi-Fi hotspot on/off, manage settings, and monitor data consumption, if equipped.
- Locate a dealer and schedule service.
- Request Roadside Assistance.
- Set a parking reminder with pin drop, take a photo, make a note, and set a timer.
- Connect with Chevrolet on social media.

Features are subject to change. For myChevrolet mobile app information and compatibility, see my.chevrolet.com.

An active OnStar or connected service plan may be required. A compatible device, factory-installed remote start, and power locks are required. Data rates apply. See www.onstar.com for details and system limitations.

Remote Services

Contact an OnStar Advisor to unlock the doors or sound the horn and flash the lamps.

Marketplace

OnStar Advisors can provide offers from restaurants and retailers on your route, help locate hotels, or book a room. These services vary by market.

Diagnostics

By monitoring and reporting on the vehicle's key systems, OnStar Advanced Diagnostics, if equipped, provides a way to keep up on maintenance. Capabilities vary by model. See www.onstar.com for details and system limitations. Features are subject to change. For updates on feature capabilities, see my.chevrolet.com. Message and data rates may apply.

Index

A

Accessories and Modifications 232
Accessory Power 192
Active
  Fuel Management 194
Add-On Electrical Equipment 230
Additional
  OnStar Information 333
Adjustments
  Lumbar, Front Seats 40
Agreements
  Trademarks and License 156
Air
  Cleaner/Filter, Engine 251
  Conditioning 163
  Dam, Front 189
  Filter Life System 250
  Filter, Passenger Compartment 166
  Vents 166
Airbag System 52
  Check 60
  How Does an Airbag Restrain? 55
  Passenger Sensing System 56
  What Makes an Airbag Inflate? 54
  What Will You See after an Airbag
    Inflates? 55
  When Should an Airbag Inflate? 54
  Where Are the Airbags? 53
Airbags
  Adding Equipment to the Vehicle 59
  Passenger Status Indicator 85
  Readiness Light 84
  Replacing System Parts after a
    Crash 60
  Servicing Airbag-Equipped Vehicles 59
Alarm
  Vehicle Security 21
Alert
  Rear Cross Traffic 225
  Side Blind Zone (SBZA) 225
All-Season Tires 272
AM-FM Radio 114
Antenna
  Diversity System 118
Antilock Brake System (ABS) 204
  Warning Light 88
Appearance Care
  Exterior 296
  Interior 301
Apple CarPlay and Android Auto 148
Assistance Program, Roadside 322
Assistance Systems
  Parking and Backing 223
Audio
  Bluetooth 121

Automatic
Dimming Mirrors 25
Door Locks 16
Headlamp System 103
Auxiliary
Jack 121
Avoiding Untrusted Media Devices 118

B

Battery
Exterior Lighting Battery Saver 107
Power Protection 106
Battery - North America 261, 290
Blade Replacement, Wiper 262
Bluetooth
Audio 121
Overview 144
Brake
Fluid 260
Pad Life System 259
System Warning Light 87
Brake Pad Life System 259
Brakes 257
Antilock 204
Brake Assist 205
Electric Brake Boost 203
Electric Parking Brake 204
Braking 170
Break-In, New Vehicle 189
Buckle To Drive 45
Bulb Replacement
Headlamp Aiming 264
Buying New Tires 285

C

Calibration
Compass 74
California
Perchlorate Materials Requirements ... 232
California Proposition 65 Warning 1, 290
Camera
Curb View 224
Rear Vision (RVC) 223
Canadian Vehicle Owners 2
Capacities and Specifications 315
Carbon Monoxide
Engine Exhaust 194
Hatch 19
Winter Driving 184
Cargo
Tie-Downs 71
Caution, Danger, and Warning 2
Center Console
Storage 71
Chains, Tire 289
Charging
System Light 85
Wireless 76
Check Engine Light (Malfunction
Indicator) 86
Child Restraints
Infants and Young Children 62
Lower Anchors and Tethers for
Children 66
Older Children 61
Securing 66
Systems 64
Circuit Breakers 266
Cleaning
Exterior Care 296
Interior Care 301
Climate Control Systems
Dual Automatic 163
Clock 74
Cluster, Instrument 79
Collision Damage Repair 325
Compartment
Underhood 234
Compartments
Storage 69
Compass 74
Competition Oriented Tires 273
Competitive Driving Mode 215

Composite Materials 189
Connected Services
  Connections 336
  Diagnostics 338
  Navigation 336
Connections
  Connected Services 336
Control
  Hill Rollback 208
  Traction and Electronic Stability 206
Control of a Vehicle 170
Controls
  Steering Wheel 111
Convenience Net 71
Convertible Top 33
Convex Mirrors 24
Coolant
  Engine Temperature Gauge 83
Cooling 163
Cooling System 252
Courtesy Lamps 105
Courtesy Transportation Program 324
Coverage Explanations 133
Cruise Control 219
  Light 92
Cupholders 69
Curb View Camera 224
Customer Assistance
  Offices 321
  Text Telephone (TTY) Users 321
Customer Information
  Publications Ordering Information 327
Customer Satisfaction Procedure 319
Cybersecurity 329

D

Damage Repair, Collision 325
Danger, Warning, and Caution 2
Dashboard 4
Data Collection
  Infotainment System 330
  OnStar 330
Data Recorder
  Performance 138
Data Recorders, Event 329
Database Coverage Explanations 133
Daytime Running Lamps (DRL) 103
Defensive Driving 170
Delayed Locking 16
Destination 126
Diagnostics
  Connected Services 338
Differential, Limited-Slip 218, 219
Disabled Vehicle
  Transporting 293
Distracted Driving 169
Diversity Antenna System 118
Door
  Ajar Light 92
  Delayed Locking 16
  Locks 14
Drive Belt Routing, Engine 318
Driver
  Assistance Systems 221
  Information Center (DIC) 92
  Mode Control 208
  Mode Control Light 90
  Teen 153
Driving
  Better Fuel Economy 169
  Competitive 215
  Defensive 170
  Distracted 169
  Hill and Mountain Roads 184
  If the Vehicle is Stuck 185
  Impaired 170
  Loss of Control 172
  Off-Road Recovery 171
  Track Events and Competitive 172
  Vehicle Load Limits 186
  Wet Roads 183
  Winter 184

Dual
Automatic Climate Control System 163
Clutch Transmission 195
Clutch Transmission Fluid 249
Clutch Transmission Fluid Life System 249
Dual Clutch Transmission
Manual Mode 198

E
Electric
Brake Boost 203
Parking Brake 204
Parking Brake Light 88
Electrical
Equipment, Add-On 230
System Overload 264
Electrical System
Fuses and Circuit Breakers 266
Instrument Panel Fuse Block 266
Rear Compartment Fuse Block 268
Electronic Stability Control (ESC) Off Light 90
Emergency
OnStar 332
Engine
Air Cleaner/Filter 251
Air Filter Life System 250
Check Light (Malfunction Indicator) 86
Compartment Overview 235
Coolant Temperature Gauge 83
Cooling System 252
Drive Belt Routing 318
Exhaust 194
Oil Life System 248
Oil Pressure Light 91
Overheating 255
Power Messages 98
Running While Parked 195
Starting 191
Engine Compartment Lamp 106
Entry Lighting 106
Event Data Recorders 329
Exit Lighting 106
Extended Parking 194
Extender, Seat Belt 51
Exterior
Lamp Controls 102
Lamps Off Reminder 102
Lighting Battery Saver 107

F
Filter
Engine Air Cleaner 251
Flash-to-Pass 103
Flashers, Hazard Warning 104
Flat Tire 290
Floor Mats 304
Fluid
Brakes 260
Dual Clutch Transmission 249
Dual Clutch Transmission Life System 249
Washer 256
Folding Mirrors 24
Frequency Statement
Radio 327
Front
Air Dam 189
Heated and Ventilated Seats 43
Lift System 214
Lift System Light 87
Fuel
Additives 228
Economy, Driving for Better 169
Filling a Portable Fuel Container 229
Filling the Tank 228
Foreign Countries 228
Gauge 82

Fuel (cont'd)
Management, Active 194
Prohibited Fuels 227
Recommended 227
Top Tier 227
Fuses
Fuses and Circuit Breakers 266
Instrument Panel Fuse Block 266
Rear Compartment Fuse Block 268

G

Garage Door Opener 99
Programming 99
Gas Strut(s) 263
Gauges
Engine Coolant Temperature 83
Fuel 82
Odometer 82
Speedometer 82
Tachometer 82
Transmission Temperature 83
Trip Odometer 82
Warning Lights and Indicators 78
General Information
Service and Maintenance 305
Towing 230
Vehicle Care 232
Global Positioning System (GPS) 132
Glove Box 69
GM Mobility Reimbursement
Program 322
Guidance
Problems with the Route 132

H

Hatch 19
Hazard Warning Flashers 104
HD Radio Technology 116
Head Restraints 38
Head-Up Display (HUD) 95
Headlamps
Aiming 264
Automatic 103
Daytime Running Lamps (DRL) 103
Flash-to-Pass 103
High-Beam On Light 92
High/Low Beam Changer 102
Lamps On Reminder 92
Leveling Control 104
Heated
Mirrors 25
Steering Wheel 73
Ventilated Front Seats 43
Heating 163
High-Beam On Light 92
High-Speed Operation 279
Hill
Rollback Control 208
Hill and Mountain Roads 184
Hill Start Assist (HSA) 205
Hood 17
Horn 73
How to Wear Seat Belts Properly 45
HVAC 163

I

If the System Needs Service 133
Ignition Positions 190
Immobilizer 23
Indicators
Warning Lights and Gauges 78
Infants and Young Children, Restraints 62
Information
Publication Ordering 327
Infotainment
Using the System 112
Infotainment System 330
Inspection
Multi-Point Vehicle 308
Instrument Cluster 79
Instrument Panel Overview 4
Interior Rearview Mirrors 26
Introduction 2, 108

J

Jack
  Auxiliary 121
Jump
  Starting - North America 290

K

Keys 6
  Remote 7
  Remote Operation 7

L

Labeling, Tire Sidewall 274
Lamps
  Courtesy 105
  Daytime Running (DRL) 103
  Engine Compartment 106
  Exterior Controls 102
  Exterior Lamps Off Reminder 102
  Exterior Lighting Battery Saver 107
  Flash-to-Pass 103
  High/Low Beam Changer 102
  Malfunction Indicator (Check
    Engine) 86
  On Reminder 92
  Reading 105
Lap-Shoulder Belt 47
LATCH, Lower Anchors and Tethers for
  Children 66
LED Lighting 264
Leveling Control
  Headlamp 104
Lifting the Vehicle, Tires 232
Lighting
  Entry 106
  Exit 106
  Illumination Control 105
  LED 264
Lights
  Airbag Readiness 84
  Antilock Brake System (ABS)
    Warning 88
  Brake System Warning 87
  Charging System 85
  Check Engine (Malfunction
    Indicator) 86
  Cruise Control Light 92
  Door Ajar 92
  Driver Mode Control 90
  Electric Parking Brake 88
  Electronic Stability Control
    (ESC), Off 90
  Engine Oil Pressure 91
  Front Lift System 87
  Gauges and Indicators 78
  High-Beam On 92
  Seat Belt Reminders 84
Lights (cont'd)
  Security 91
  Service Electric Parking Brake 88
  Tire Pressure 91
  Traction Control System
    (TCS)/Electronic Stability Control
    Light 89
  Traction Off 89
Limited-Slip Differential 218, 219
Locks
  Automatic Door 16
  Delayed Locking 16
  Door 14
  Lockout Protection 16
Loss of Control 172
Low-Profile Tires 273
Lower Anchors and Tethers for
  Children (LATCH System) 66
Lumbar Adjustment 40
  Front Seats 40

M

Maintenance
  Records 313
Maintenance Schedule 306
  Recommended Fluids and
    Lubricants 310
Malfunction Indicator Lamp 86

Manual
Mode 198
Map Data Updates 133
Maps 125
Media
Avoiding Untrusted Devices 118
Memory Seats 40
Messages
Engine Power 98
Vehicle 98
Vehicle Speed 99
Mirrors
Automatic Dimming 25
Automatic Dimming Rearview 26
Convex 24
Folding 24
Heated 25
Interior Rearview 26
Manual Rearview 26
Power 24
Rear Camera 26
Tilt in Reverse 25
Mode
Driver Control 208
Monitor System, Tire Pressure 280
Multi-Point Vehicle Inspection (MPVI) 308

N

Navigation
Connected Services 336
Destination 126
Symbols 125
Using the System 122
Net, Convenience 71
New Vehicle Break-In 189

O

Odometer 82
Trip 82
Off-Road
Recovery 171
Oil
Engine 242, 245
Engine Oil Life System 248
Pressure Light 91
Older Children, Restraints 61
Online Account 321
OnStar 330
Additional Information 333
Overview 331
OnStar Emergency 332
OnStar Security 332
Outlets
Power 75
Overheating, Engine 255
Overview 109
Instrument Panel 4

P

Panel, Roof 30
Park
Assist 223, 225
Shifting Into 193
Shifting Out of 193
Parking
Brake and P (Park) Mechanism
Check 262
Extended 194
Over Things That Burn 194
Parking or Backing
Assistance Systems 223
Passenger
Airbag Status Indicator 85
Compartment Air Filter 166
Sensing System 56
Perchlorate Materials Requirements,
California 232
Performance
Data Recorder (PDR) 138
Transmission Active 89

Phone
Apple CarPlay and Android Auto 148
Bluetooth 144
Port
USB 118
Positioning
Vehicle 132
Power
Mirrors 24
Outlets 75
Protection, Battery 106
Retained Accessory (RAP) 192
Seat Adjustment 38
Windows 28
Pregnancy, Using Seat Belts 50
Privacy
Vehicle Data Recording 328
Problems with Route Guidance 132
Program
Courtesy Transportation 324
Prohibited Fuels 227
Proposition 65 Warning
California 1
Proposition 65 Warning, California 290
Publication Ordering Information 327

R
Radiator 252
Radio
AM-FM Radio 114
Data System (RDS) 117
Frequency Statement 327
HD Radio Technology 116
Reception 117
Satellite 117
Reading Lamps 105
Rear
Camera Mirror 26
Cross Traffic Alert (RCTA) System 225
Storage 70
Vision Camera (RVC) 223
Windows 30
Rearview Mirrors 26
Automatic Dimming 26
Reclining Seatbacks 39
Recognition
Voice 133
Recommended
Fuel 227
Recommended Fluids and Lubricants 310
Records
Maintenance 313
Recreational Vehicle Towing 296
Reimbursement Program, GM
Mobility 322
Remote
Key 7
Key Operation 7
Vehicle Start 12
Replacement Parts
Airbags 60
Maintenance 311
Replacing
Airbag System 60
Seat Belt System Parts after a Crash 51
Reporting Safety Defects
Canadian Government 328
General Motors 328
U.S. Government 327
Retained Accessory Power (RAP) 192
Reverse Tilt Mirrors 25
Ride Control Systems
Enhanced Traction
System (ETS) 218, 219
Roads
Driving, Wet 183
Roadside Assistance Program 322
Roof
Panel 30
Rotation, Tires 283
Routing, Engine Drive Belt 318

Run-Flat Tires 272
Running the Vehicle While Parked 195

S

Safety Defects Reporting
Canadian Government 328
General Motors 328
U.S. Government 327
Safety System Check 51
Satellite Radio 117
Scheduling Appointments 324
Seat Belts 44
Buckle To Drive 45
Care 51
Extender 51
How to Wear Seat Belts Properly 45
Lap-Shoulder Belt 47
Reminders 84
Replacing after a Crash 51
Use During Pregnancy 50
Seats
Head Restraints 38
Heated and Ventilated, Front 43
Lumbar Adjustment, Front 40
Memory 40
Power Adjustment, Front 38
Reclining Seatbacks 39
Securing Child Restraints 66
Security
Light 91
OnStar 332
Vehicle 21
Vehicle Alarm 21
Service 167
Accessories and Modifications 232
Doing Your Own Work 234
Electric Parking Brake Light 88
Maintenance Records 313
Maintenance, General Information 305
Parts Identification 314
Scheduling Appointments 324
Services
Special Application 309
Servicing System 133
Servicing the Airbag 59
Settings 150
Shifting
Into Park 193
Out of Park 193
Side Blind Zone Alert (SBZA) 225
Signals, Turn and Lane-Change 104
Software Updates 114
Special Application Services 309
Specifications and Capacities 315
Speedometer 82
Start Assist, Hill 205
Start Vehicle, Remote 12
Starting the Engine 191
Steering 170
Heated Wheel 73
Wheel Adjustment 73
Wheel Controls 111
Storage
Center Console 71
Compartments 69
Convenience Net 71
Cupholders 69
Glove Box 69
Rear 70
Storage Areas
Underhood 70
Struts
Gas 263
Stuck Vehicle 185
Summer Tires 274
Sun Visors 30
Symbols 3
Navigation 125
System
Airbag 52
Brake Pad Life 259
Driver Assistance 221
Engine Air Filter Life 250
Front Lift 214

System (cont'd)
Global Positioning 132
Infotainment 330
Rear Cross Traffic Alert 225

T

Tachometer 82
Teen Driver 153
Text Telephone (TTY) Users 321
Theft-Deterrent Systems 23
Immobilizer 23
Time 74
Tires 271
All-Season 272
Buying New Tires 285
Chains 289
Competition Oriented 273
Designations 275
Different Size 286
If a Tire Goes Flat 290
Inspection 283
Lifting the Vehicle 232
Low-Profile 273
Pressure 278, 279
Pressure Light 91
Pressure Monitor Operation 281
Pressure Monitor System 280
Rotation 283
Tires (cont'd)
Run-Flat 272
Sidewall Labeling 274
Terminology and Definitions 276
Uniform Tire Quality Grading 287
Wheel Alignment and Tire Balance 288
Wheel Replacement 288
When It Is Time for New Tires 285
Winter 272
Top Tier Fuel 227
Towing
General Information 230
Recreational Vehicle 296
Track Events and Competitive Driving 172
Traction
Control System (TCS)/Electronic
Stability Control Light 89
Control/Electronic Stability Control 206
Limited-Slip Differential 218, 219
Off Light 89
Trademarks and License Agreements 156
Transmission
Dual Clutch 195
Dual Clutch Fluid 249
Dual Clutch Fluid Life System 249
Performance, Active 89
Temperature Gauge 83
Transportation Program, Courtesy 324
Transporting
a Disabled Vehicle 293
Trip Odometer 82
TTY Users
Customer Assistance 321
Turn and Lane-Change Signals 104

U

Underhood
Compartment Overview 234
Storage 70
Uniform Tire Quality Grading 287
Universal Remote System 99
Operation 101
Programming 99
Updates
Map Data 133
Software 114
USB Port 118
Using
Infotainment System 112
Navigation System 122
This Manual 2

V

Vehicle
Alarm System 21
Canadian Owners 2
Control 170

Vehicle (cont'd)
Data Recording and Privacy 328
Identification Number (VIN) 314
Load Limits 186
Messages 98
Positioning 132
Remote Start 12
Security 21
Speed Messages 99
Symbols 3
Vehicle Care
Tire Pressure 278
Ventilation, Air 166
Visors 30
Voice Recognition 133

W

Warning
Brake System Light 87
Caution and Danger 2
Hazard Flashers 104
Lights, Gauges, and Indicators 78
Washer Fluid 256
Wheels
Alignment and Tire Balance 288
Different Size 286
Replacement 288
When It Is Time for New Tires 285
Windows 28
Power 28
Rear 30
Windshield
Replacement 263
Wiper/Washer 73
Winter
Driving 184
Tires 272
Wiper
Blade Replacement 262
Wireless Charging 76

Scan to Access

- Owner's Manuals
- Warranty Information
- Connected Services
- My Chevrolet Rewards
- myChevrolet Mobile App
- How-To Videos
- Vehicle Diagnostics
- Scheduled Maintenance
- Vehicle Features
- Many Additional Resources

United States

Canada

United States

Customer Assistance
1-800-222-1020
Roadside Assistance
1-800-243-8872

United States and Canada

Connected Services
1-888-4-ONSTAR

Canada

Customer Assistance
1-800-263-3777
Roadside Assistance
1-800-268-6800

84795300 A